SWIFT EQUIPMENT

Swift Equipment Pty Ltd
41 Southeast Blvd, Pakenham, VIC 3810
ABN: 52 613 199 170

SWIFT TS06E

Elevating Work Platform

OPERATOR'S MANUAL

Swift Equipment Pty Ltd
41 Southeast Blvd, Pakenham, VIC 3810
ABN: 52 613 199 170

Proud Member of:

EWPA
Elevating Work Platform Association

Manufacturer:

Swift Equipment PTY LTD
41 Southeast Boulevard,
Pakenham, VIC, 3810

Contents

Introduction ---------- 1
Symbol and hazard diagram definition -------4
General safety ---------- 7
Personnel safety ----------9
Work area safety ---------- 10
Legend- -17
Controller- -18
Inspections ----------22
Operational instruction----------32
Transportation lifting instructions ----------47
Specification- -50
Maintenance - 51
Hydraulic schematic diagram ---------- 78
Electrical schematic diagram ----------79

Please contact us：
Website： **www.swiftequipment.com.au**
Phone: 1300 477 055

@2022 Copyright Swift Equipment PTY LTD.
All rights reserved

Introduction

About this manual

Swift Equipment appreciates your choice of our machine for your application. Our number one priority is user safety, which is best achieved by our joint efforts. This book is an operation and daily maintenance manual for the user or operator of a Swift Equipment machine.

This manual should be considered a permanent part of your machine and should remain with the machine at all times. If you have any questions, contact Swift Equipment.

Intended Use and Familiarization Guide

The intended use of this machine is to lift personnel, including tools to an aerial work site.
Before operating the machine, it's the operator's responsibility to read and understand this familiarization guide.

- ☑ Each person must be trained to operate a Mobile Elevating Work Platform (MEWP) in line with EWPA guidelines.
- ☑ Familiarization with the MEWP must be given to each person who is authorized, competent and trained.
- ☑ Only trained and authorized personnel should be permitted to operate the machine.
- ☑ The operator is responsible to read, understand, and obey the manufacturer's instructions and safety rules provided in the Operator's Manual.
- ☑ The Operator's Manual is located in the manual storage container, on the platform.

Introduction

Danger

Failure to obey with the instructions and safety rules in this manual will result in death or serious injury.

Do Not Operate Unless：

☑ You learn and practice the principles of safe machine operation contained in this operator’s manual.

1 Avoid hazardous situations. Know and understand the safety rules before going on to the next section.

2 Always perform a pre-operation inspection.

3 Always perform function tests prior to use.

4 Inspect the workplace.

5 Only use the machine as it was intended.

☑ You read, understand, and obey the manufacturer's instructions and safety rules-, safety and operator’s manuals and machine decals.

☑ You read, understand, and obey employer’ssafety rules and worksite regulations.

☑ You read, understand, and obey all applicablegovernmental regulations.

☑ You are properly trained to safely operate the machine.

Safety Sign Maintenance

Replace any missing or damaged safety signs. Always keep operator safety in mind. Use mild soap and water to clean safety signs. Do notuse solvent-based cleaners because they may damage the safety sign material.

Introduction

Hazard Classification

Swift Equipment product decals use symbols, color coding and signal words to identify the following:

Safety alert symbol-used to alert personnel to potential personal injury hazards. Obey all safety messages that follow this symbol to avoid possible injury or death.

Red-used to indicate the presence of an imminently hazardous situation which, if not avoided, will result in death or serious injury.

Orange-used to indicate the presence of a potentially hazardous situation which, if not avoided, could result in death or serious injury.

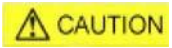

Yellow with safety alert symbol-used to indicate the presence of a potentially hazardous situation which, if not avoided, may cause minor or moderate injury.

Green-used to indicate operation or maintenance information.

Explosion and Fire Hazard

Do not operate the machine or charge the battery in hazardous locations or locations where potentially flammable or explosive gases or particles may be present.

Damaged Machine Hazards

Do not use a damaged or malfunctioning machine.

Conduct a thorough pre-operation inspection of the machine and test all functions before each work shift. Immediately tag and remove from service a damaged or malfunctioning machine.

Be sure all maintenance has been performed as specified in this manual and the appropriate service manual.

Be sure all decals are in place and legible.

Be sure the operator's, safety, and responsibilities manuals are complete, legible and in the storage container located on the platform.

Bodily Injury Hazard

Do not operate the machine with a hydraulic oil or air leak. An air leak or hydraulic leak can penetrate and/or burn skin.

Improper contact with components under any cover will cause serious injury. Only trained maintenance personnel should access compartments. Access by the operator is only advised when performing a pre-operation inspection. All compartments must remain closed and secured during operation.

Symbol and Hazard Pictorials Definitions

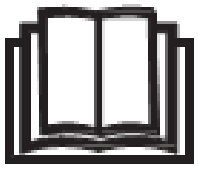 Read the Operator’s	Read the Service	Crush Hazards	Crush Hazards
Runaway Hazard	Tip-over Hazard	Tip-over Hazard	Tip-over hazard
Tip-over Hazard	Electrocution Hazard	Electrocution Hazard	Explosion Hazard
Fire Hazard	Burn Hazard	Skin Injection Hazard	Engage Safety Arm
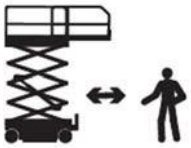 Keep away from moving parts	Keep clear of outriggers and tires	Move machine to level ground	Close chassis tray

Symbol and Hazard Pictorials Definitions

Lower the platform.	Do not set up where it cannot be leveled with outriggers	Maintain required clearance	Access by trained and authorized personnel only
Use a piece of cardboard or paper to search for leaks	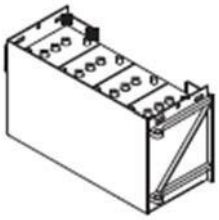 Batteries used as counterweights	Chock the wheels	No smoking
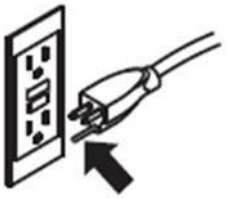 Grounded AC 3-wire only	Replace damaged wires and cords	Wheel load	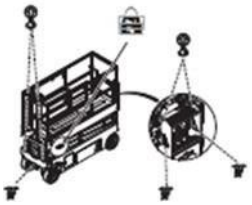 Lifting & tie down instructions
Lifting point	Lanyard anchorage points	Wind speed	Tiedown

Symbol and Hazard Pictorials Definitions

Release brakes	Engage brake	Pressure rating for air line to platform	Voltage rating for power to platform
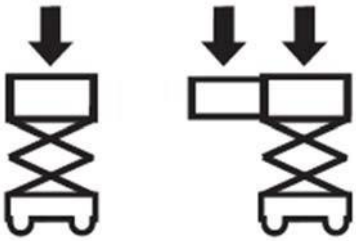 Maximum capacity		Indoor	Outdoor
Manual force	Platform overloaded		

General Safety

TS06E

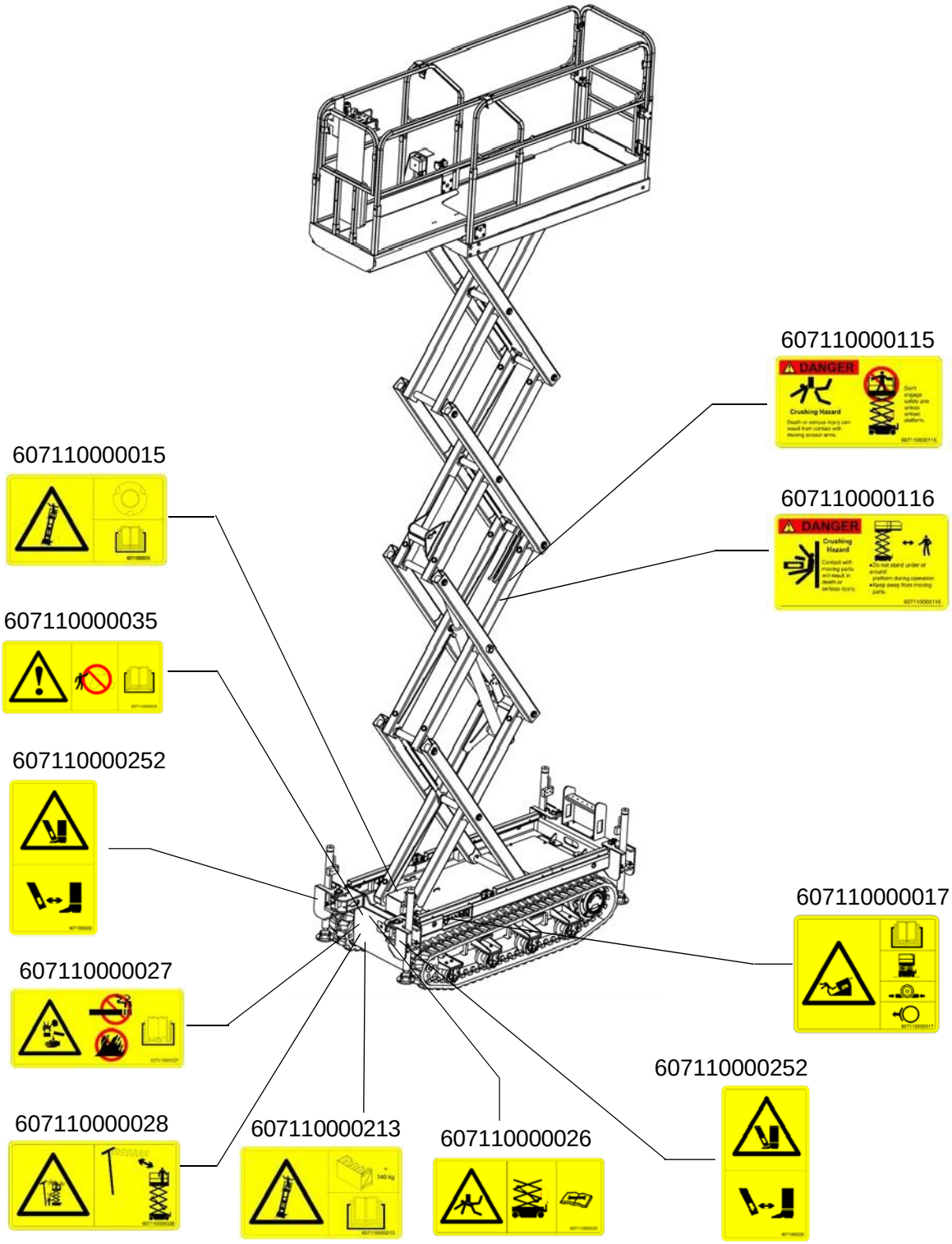

General Safety

TS06E

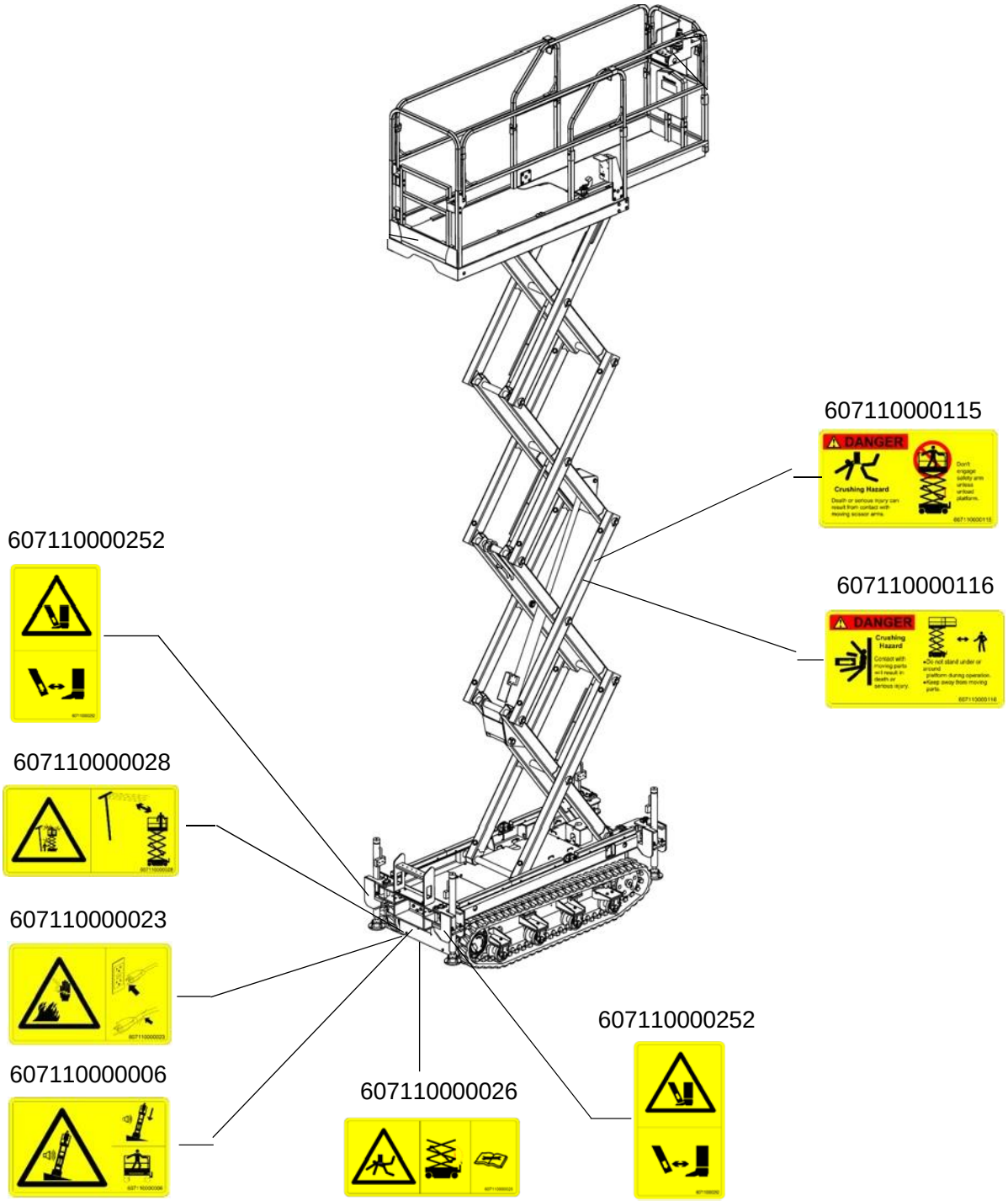

Personal Safety

Personal Fall Protection

Personal fall protection equipment (PFPE) is not required when operating this machine. If PFPE is required by job site or employer rules, the following shall apply:
All PFPE must comply with applicable governmental regulations and must be inspected and used in accordance with the manufacturer’s instructions.

Work Area Safety

Electrocution Hazards

This machine is **not** electrically insulated and will **not** provide protection from contact with or proximity to electrical current.

Maintain safe distances from electrical power lines and apparatus in accordance with applicable governmental regulations and the following chart.

Voltage Phase to Phase	Minimum Safe Approach Distance Meters
0 to 300V	Avoid Contact
300V to 50KV	3.05 m
50KV to 200KV	4.60 m
200KV to 350KV	6.10m
350KV to 500KV	7.62m
500KV to 750KV	10.67m
750KV to 1000KV	13.72m

Allow for platform movement, electrical line sway or sag and beware of strong or gusty winds.
Keep away from the machine if it contacts energized power lines. Personnel on the ground or in the platform must not touch or operate the machine until energized power lines are shut off.
Do not operate the machine during lightning or storms.
Do not use the machine as a ground for welding.

Tip-over Hazards

Occupants, equipment and materials must not exceed the maximum platform capacity or the maximum capacity of the platform extension.

Maximum capacity

Model	Platform retracted	Platform only	Extension only	Maximum occupants
FS0610TL	507lbs 230kg	242lbs 110kg	265lbs 120kg	Indoor-2 Outdoor-2

Platform retracted

Platform extended

Extension only Platform only

Work Area Safety

The weight of options and accessories, such as panel carriers, will reduce the rated platform capacity and must be subtracted from the platform capacity. See the decals with the options and accessories.

If using accessories, read, understand and obey the decals, instructions and manuals with the accessory.

Do not operate the machine in strong or gusty winds. Do not increase the surface area of the platform or the load. Increasing the area exposed to the wind will decrease machine stability.

Do not raise the platform unless the machine is on a firm, level surface.

Use extreme care and slow speeds while driving the machine in a stowed position across uneven terrain, debris, unstable or slippery surfaces and near holes and drop-offs.

Do not depend on the tilt alarm as a level indicator. The tilt alarm sounds on the chassis only when the machine is on a slope.

If the tilt alarm sounds:
Lower the platform. Move the machine to a firm, level surface. If the tilt alarm sounds when the platform is raised, use extreme caution to lower the platform.

Do not drive the machine on or near uneven terrain, unstable surfaces or other hazardous conditions with the platform raised.
Do not use the machine as a crane.
Do not push the machine or other objects with the platform.
Do not contact adjacent structures with the platform.
Do not tie the platform to adjacent structures.
Do not place loads outside the platform perimeter.
Do not operate the machine with the chassis trays open.

Do not drive while the platform is raising.

Work Area Safety

Do not push off or pull toward any object outside of the platform.

Do not place or attach fixed or overhanging loads to any part of this machine.

Model	Maximum allowable side force	Maximum occupants
TS06E	Outriggers -90lbs/400N On Tracks-90lbs/400N	Outriggers On Tracks

Do not alter or disable the limit switches.

Do not alter or disable machine components that in any way affect safety and stability.

Do not place ladders or scaffolds in the platform or against any part of this machine.

Do not modify or alter a mobile elevated work platform without prior written permission from the manufacturer. Mounting attachments for holding tools or other materials onto the platform, toe boards, or guard rail systems can increase the weight in the platform and the surface area of the platform or the load.

Do not replace items critical to machine stability with items of different weight or specification.

Do not transport tools and materials unless they are evenly distributed and can be safely handled by person(s) in the platform.

Do not use the machine on a moving or mobile surface or vehicle.

Be sure all tires are in good condition; castle nuts are properly tightened and cotter pins are properly installed.

If equipped with outriggers
Do not set the machine up where it cannot be leveled using only the outriggers.
Do not adjust the outriggers while the platform is raised.
Do not drive while the outriggers are lowered.

Work Area Safety

Crushing Hazard

Keep hands and limbs out of scissors.

Keep hands clear when folding rails.

Do not work under the platform or in the scissor links without the safety arm in place.

Use common sense and planning when operating the machine with the controller from the ground. Maintain safe distances between the operator, the machine and fixed objects.

Operation on Slopes Hazards

Do not drive the machine on a slope that exceeds the slope and side slope rating of the machine. Slope rating applies to machines in the stowed position.

Model	Maximum slope rating, stowed position	Maximum side slope rating, stowed position
TS06E	30% (16.7°)	30% (16.7°)

Note: Slope rating is subject to ground conditions with one person in the platform and adequate traction. Additional platform weight may reduce slope rating. See Driving on a Slope in the Operating Instructions section.

Work Area Safety

Fall Hazards

The guard rail system provides fall protection. If occupants of the platform are required to wear personal fall protection equipment (PFPE) due to job site or employer rules, PFPE equipment and its use shall be in accordance with the PFPE manufacturer's instructions and applicable governmental requirements. Use approved lanyard attachment point provided.

Do not sit, stand or climb on the platform guard rails. Maintain a firm footing on the platform floor, at all times.

Do not climb down from the platform when raised.

Keep the platform floor clear of debris.

Close the entry gate before operating.

Do not operate the machine unless the guard rails are properly installed and the entry is secured for operation.

Do not enter or exit the platform unless the machine is in the stowed position.

Collision Hazards

Be aware of limited sight Distance and blind spots when driving or operating.

Be aware of extended platform position when moving the machine.

The machine must be on a level surface or secured before releasing the brakes.

Operators must comply with employer, job site and governmental rules regarding use of personal protective equipment.

Check the work area for overhead obstructions or other possible hazards.

Be aware of crushing hazards when grasping the platform guard rail.

Observe and use color-coded direction arrows on the platform controls and platform decal plate for drive and steer functions.

Work Area Safety

Do not lower the platform unless the area below is clear of personnel and obstructions.

Limit travel speed according to the condition of the ground surface, congestion, slope, location of personnel, and any other factors which may cause collision.
Do not operate a machine in the path of any crane or moving overhead machinery unless the controls of the crane have been locked out and/or precautions have been taken to prevent any potential collision.

No stunt driving or horseplay while operating a machine.

Hazards Crushing

Keep hands and limbs out of scissors.
Keep hands clear when folding rails.
Do not work under the platform or in the scissor links without the safety arm in place.
Use common sense and planning when operating the machine with the controller from the ground.
Maintain safe distances between the operator, the machine and fixed objects.

Component Damage Hazards

Do not use any battery charger greater than 24V to charge the batteries.
Do not use the machine as a ground for welding.

Bodily Injury Hazard

Do not operate the machine with a hydraulic oil or air leak. An air leak or hydraulic leak can penetrate and/or burn skin.
Improper contact with components under any cover will cause serious injury. Only trained maintenance personnel should access compartments. Access by the operator is only advised when performing a pre-operation inspection. All compartments must remain closed and secured during operation.

Explosion and Fire Hazards

Do not operate the machine or charge the battery in hazardous locations or locations where potentially flammable or explosive gases or particles may be present.

Damaged Machine Hazards

Do not use a damaged or malfunctioning machine.

Conduct a thorough pre-operation inspection of the machine and test all functions before each work shift. Immediately tag and remove from service a damaged or malfunctioning machine.

Be sure all maintenance has been performed as specified in this manual and the appropriate service manual.
Be sure all decals are in place and legible.

Be sure the operator's, safety, and responsibilities manuals are complete, legible, and in the storage container located on the machine.

Work Area Safety

Battery Safety

Burn Hazards

Batteries contain acid. Always wear protective clothing and eyewear when working with batteries.

Avoid spilling or contacting battery acid. Neutralize battery acid spills with baking soda and water.

Do not expose the batteries or the charger to water or rain during charging.

Explosion Hazards

Keep sparks, flames and lighted tobacco away from batteries. Batteries emit explosive gas.

The battery tray should remain open during the entire charging cycle.

Do not contact the battery terminals or the cable clamps with tools that may cause sparks.

Electrocution Hazards

Connect the battery charger to a grounded, AC 3-wire electrical outlet only.

Inspect daily for damaged cords, cables and wires. Replace damaged items before operating.

Avoid electrical shock from contact with battery terminals. Remove all rings, watches and other jewellery.

Tip-over Hazard

Do not use batteries that weigh less than the original equipment. Batteries are used as counterweight and are critical to machine stability. Each battery must weigh 62 lbs/ 28 kg.

Lifting Hazard

Use the appropriate number of people and proper lifting techniques when lifting batteries.

Lockout after Each Use

1. Select a safe parking location–firm level surface, clear of obstruction and traffic.
2. Lower the platform.
3. Turn the key switch to the off position and unplug the key to avoid unauthorized use。
4. Charge the batteries.

Legend

TS06E

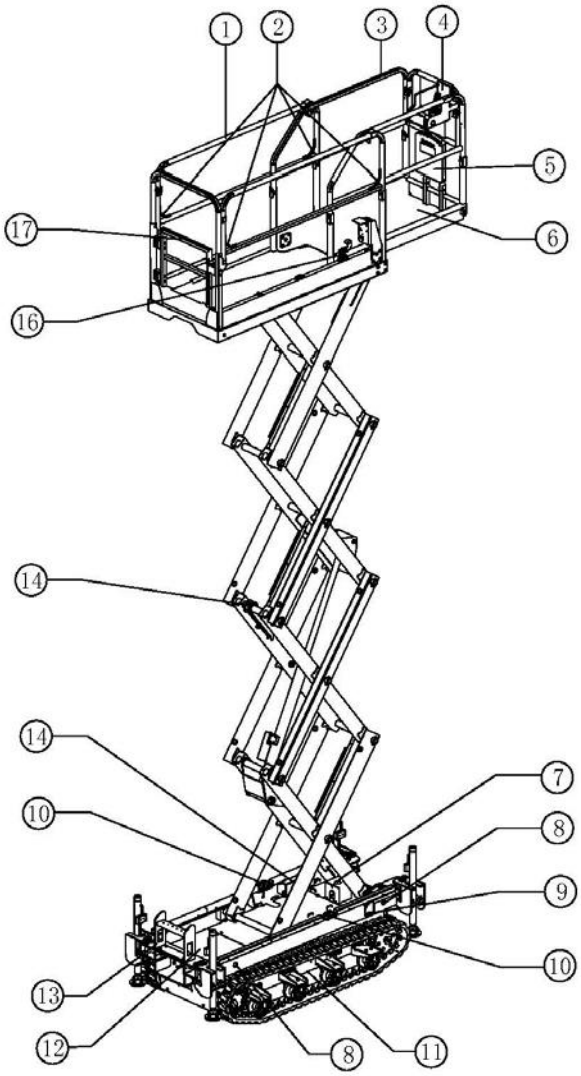

1 Platform guard rails

2 Lanyard anchorage points

3 Platform extension

4 Platform controls

5 Manual storage container

6 Foot switch (if equipped)

7 Tilt alarm

8 Transport tie-down

9 Auxiliary lowering knob

10 Flashing beacon

11 Forklift pocket

12 Battery charger

13 Entry ladder / transport tie-down

14 Ground controls

15 Safety arm

16 Platform extension release pedal

17 Platform entry gate

Controls

Electronic Control Unit

Controls

Platform Control Unit

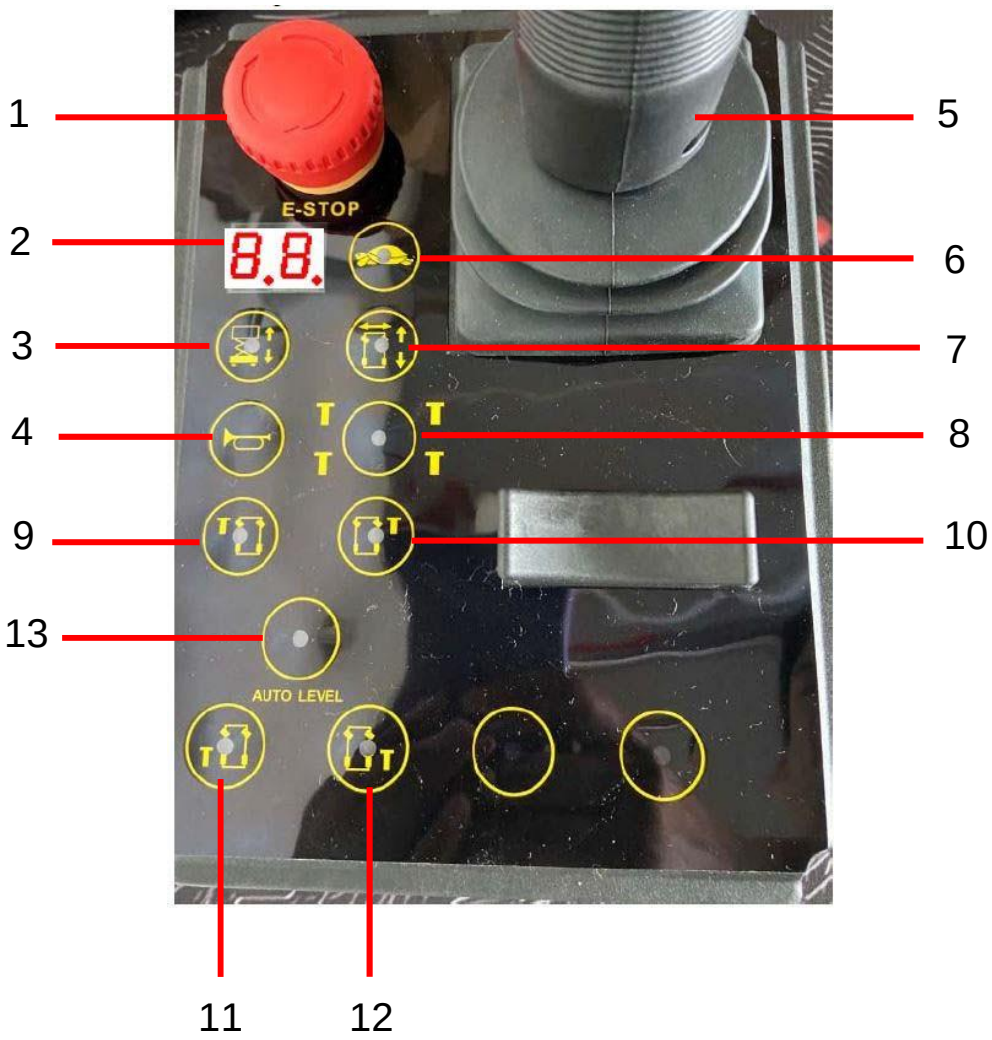

Controls

Platform Control Unit

1 Emergency Stop Button

2 LED Display

3 Lifting Mode Selection

4 Horn

3 Control Handle
Outrigger operation function is added, which is reflected in the outrigger button

6 Low Speed Drive

7 Drive Mode Select

8 Outrigger select and cancel button.
When the outrigger needs to be operated, please activate this button to make its light on

9 Left- Front outrigger function button
When the left-front outrigger needs to be operated independently, please press and hold the button, hold the handle, press the Enable button, and push & pull the handle to extend & retract the outrigger.

10 Right-Front outrigger function button
When need to operate the right-front outrigger independently, please press and hold this button, hold the handle, press the enable button, and push & pull the handle to extend & retract the outriggers.

11 Left-Rear outrigger function button
When the left-rear outrigger needs to be operated independently, please press and hold this button, hold the handle, press the enable button, push & pull the handle to extend & retract the outriggers.

12 Right-Rear outrigger function button
When the left-rear outrigger needs to be operated independently, please press and hold this button, hold the handle, press the enable button, push & pull the handle to extend & retract the outriggers.

13 Automatic leveling and full retraction enabled button.
When all outriggers touch the solid ground, press and hold this button, hold the handle, press the enable button, and pull the handle to automatically level the outriggers. When the outrigger needs to be retracted, press and hold this button, hold the handle, press the enable button, then push the handle to retract all outriggers.

Controls

Outrigger Operation Logic

- **Outrigger Extending Standard Process**

1 Activate the outrigger 'Select' and 'Cancel' buttons on the platform controller, the button light is on, and the 'Driving and Lifting' mode selection buttons light are off.

2 Press and hold the function buttons of the 4 outriggers separately or at the same time, hold the handle at the same time, press the enable button, pull the handle to extend the corresponding legs, and all outriggers need to touch the solid ground.

3 Press and hold the automatic leveling and full retraction enable button, hold the handle, press the enable button, and pull the handle to automatically level the outrigger.

4 When leveling was done, the horn will sound, please release the handle, press the outrigger selection, and cancel button on the upper control handle, cancel the outrigger program, and the button light will be off.

- **Standard process of retracting the outriggers**

1 Lower the working platform to the lowest position.

2 Activate the outrigger selection and cancel buttons on the upper control handle, the button light will be on, and the driving selection and lifting selection button light will be off.

3 Press and hold the automatic leveling and full retraction enable button, hold the handle at the same time, press the enable button, and push the handle to retract all legs until they are retracted completely.

Notes:

1 Danger: The outriggers must be supported and touched on solid ground.

2 Note: The outriggers need to be expended manually respectively when extending the outriggers, and the automatic leveling can be operated only after touching the ground.

3 Note: Before driving, it is necessary to check whether the outriggers are fully retracted.

Inspections

Do Not Operate Unless:

☑ You learn and practice the principles of safe machine operation contained in this operator's manual.

1 Avoiding dangerous situations

2 Always perform a pre-operation inspection.
Know and understand the pre-operation inspection before going on to the next section.

3 Always perform function tests prior to use.

4 Inspect the workplace.

5 Only use the machine as it was intended.

Pre-operation Inspection Fundamentals

It is the responsibility of the operator to perform a pre-operation inspection and routine maintenance.

The pre-operation inspection is a visual inspection performed by the operator prior to each work shift. The inspection is designed to discover if anything is apparently wrong with a machine before the operator performs the function tests.

The pre-operation inspection also serves to determine if routine maintenance procedures are required. Only routine maintenance items specified in this manual may be performed by the operator.

Refer to the list on the next page and check each of the items.

If damage or any unauthorized variation from factory delivered condition is discovered, the machine must be tagged and removed from service.

Repairs to the machine may only be made by a qualified service technician, according to the manufacturer's specifications. After repairs are completed, the operator must perform a pre-operation inspection again before going on to the function tests.

Scheduled maintenance inspections shall be performed by qualified service technicians, according to the manufacturer's specifications and the requirements listed in the responsibilities manual.

Inspections

Pre-operation Inspection

- ❑ Be sure that the operator's, safety, and responsibilities manuals are complete, legible and in the storage container located in the platform.
- ❑ Be sure that all decals are legible and in place. See Inspections section.
- ❑ Check for hydraulic oil leaks and proper oil level. Add oil if needed. See Maintenance section.
- ❑ Check for battery fluid leaks and proper fluid level. Add distilled water if needed. See Maintenance section.

Check the following components or areas for damage, improperly installed or missing parts and unauthorized modifications:

- ❑ Electrical components, wiring and electrical cables
- ❑ Hydraulic hoses, fittings, cylinders and manifolds
- ❑ Drive motors
- ❑ Wear pads
- ❑ Tires and wheels
- ❑ Limit switches, alarms and horn
- ❑ Nuts, bolts and other fasteners
- ❑ Brake release components
- ❑ Safety arm
- ❑ Platform extension
- ❑ Scissor Pins and retaining fasteners
- ❑ Platform control joystick
- ❑ Battery pack and connections
- ❑ Ground strap
- ❑ Platform entry gate
- ❑ Lanyard anchorage points
- ❑ Platform overload components
- ❑ Outrigger housing and footpads (if equipped)

Check entire machine for:

- ❑ Cracks in welds or structural components
- ❑ Dents or damage to machine
- ❑ Excessive rust, corrosion or oxidation
- ❑ Verify that all structural and other critical components are present and all associated fasteners and pins are in place and properly tightened.
- ❑ Be sure side rails are installed and bolts are fastened.
- ❑ Be sure that the chassis trays are closed and latched and that the batteries areproperly connected.

Note: If the platform must be raised to inspect the machine, make sure the safety arm is in place. See Operating Instructions section.

Inspections

Do Not Operate Unless:

☑ You learn and practice the principles of safe machine operation contained in this operator's manual.

1 Avoiding hazardous situations.
2 Always perform a pre-operation inspection.
3 Always perform function tests prior to use.

Know and understand the function tests before going on to the next section.

4 Inspect the workplace.
5 Only use the machine as it was intended.

Function Test Fundamentals

The function tests are designed to discover any malfunctions before the machine is put into service. The operator must follow the step-by-step instructions to test all machine functions.

A malfunctioning machine must never be used. If malfunctions are discovered, the machine must be tagged and removed from service. Repairs to the machine may only be made by a qualified service technician, according to the manufacturer's specifications.

After repairs are completed, the operator must perform a pre-operation inspection and function tests again before putting the machine into service.

Inspections

At the Ground Controls

1 Select a test area that is firm, level and free of hazards.
2 Be sure the batteries are connected.
3 Pull out the platform and ground red Emergency Stop button to the on position.
4 Turn the key switch to ground control.
5 Observe the diagnostic LED readout on the platform controls.
⊙ Results: The LED should look like the picture below.

6 Observe the LED diagnostic readout on the ground controls.
⊙ Result: The LED should look like the picture below.

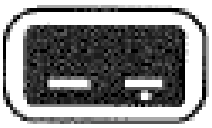

Test Emergency Stop

7 Push in the ground red Emergency Stop button to the off position.
⊙ Result: No functions should operate.
8 Pull out the red Emergency Stop button on the position.

Test the Up/Down Functions

The audible warnings on this machine and the standard horn all come from the same central alarm. The horn is a constant tone. The descent alarm sounds at 60 beeps per minute. The alarm sounds at 180 beeps per minute when the pothole guards have not deployed and when the machine is not level. An optional automotive-style horn is also available.

9 Do not press the lift function enable button.
10 Press the platform up or platform down button.
⊙ Result: The lift function should not operate.
11 Do not press the platform up or platform down buttons.
12 Press the lift function enable button.
⊙ Result: The lift function should not operate.
13 Press and hold the lift function enable button and press the platform up button.
⊙ Result: The outdoor area of operation should be selected and the platform should raise.
14 Press and hold the lift function enable button and press the platform down button.
⊙ Result: The platform should lower. The descent alarm should sound while the platform is lowering.

Inspections

Test Auxiliary Lowering

15 Activate the up function by pressing the lift enable button and platform up button, and raise the platform approximately 2 ft. / 60 cm.

⊙ Result: The platform should lower. The descent alarm will not sound.

16 Turn the key switch to platform control.

At the Platform Controls

Test Emergency Stop

17 Push in the platform red Emergency Stop button to the off position.

⊙ Result: No functions should operate.

Test the Horn

18 Pull out the red Emergency Stop button to the on position.

19 Press the horn button.

⊙ Result: The platform alarm, chassis alarm and automotive horn (if equipped) should sound.

Inspections

Test the Function Enable Switch and the Up/Down Functions

20 Do not hold the function enable switch on the control handle.

21 Slowly move the control handle in the direction indicated by the blue arrow, then in the direction indicated by the yellow arrow.

⊙ Result: No functions should operate.

22 Press the lift function button.

23 Wait seven seconds for the lift function to time out.

24 Slowly move the control handle in the direction indicated by the blue arrow, then in the direction indicated by the yellow arrow.

⊙ Result: The lift function should not operate.

25 Press the lift function button.

26 Press and hold the function enable switch on the control handle. Slowly move the control handle in the direction indicated by the blue arrow.

Machines equipped with a foot switch: Press andhold the foot switch and press and hold the function enable switch on the control handle at the same time.

⊙ Result: The platform should rise. The pothole guards should deploy. The outdoor use button should illuminate.

27 Release the control handle.

⊙ Result: The platform should stop raising.

28 Press and hold the function enable switch on the control handle. Slowly move the control handle in the direction indicated by the yellow arrow.

⊙ Result: The platform should lower. The descent alarm should sound while the platform is lowering.

Test the Drive Function Button

29 Press the drive function button.

30 Wait seven seconds for the drive function to time out. Slowly move the control handle in the direction indicated by the blue arrow, then in the direction indicated by the yellow arrow.

⊙ Result: No functions should operate.

Inspections

Test the steering

Note: When performing the steer and drive function tests, stand in the platform facing the steer end of the machine.

31 Press the drive function button.

32 Press and hold the function enable switch on the control handle.

33 Press the thumb rocker switch on top of the control handle in the direction indicated by the blue triangle on the control panel.

⊙ Result: The drive wheel chain should turn in the direction indicated by the blue triangle.

34 Press the thumb rocker switch on top of the control handle in the direction indicated by the yellow triangle, on the control panel.

⊙ Result: the drive wheel chain should turn in the direction indicated by the yellow triangle.

Test Drive and Braking

35 Press the drive function button.

36 Press and hold the function enable switch on the control handle.

Machines equipped with foot switch: Press and hold the foot switch and press and hold the function enable switch on the control handle at the same time.

37 Slowly move the control handle in the direction indicated by the blue arrow on the control panel until the machine begins to move, then return the control handle to the center position.

⊙ Result: The machine should move in the direction that the blue arrow points on the control panel, then come to an abrupt stop when the control handle is returned to the center position.

38 Slowly move the control handle in the direction indicated by the yellow arrow on the control panel until the machine begins to move, then return the control handle to the center position.

⊙ Result: The machine should move in the direction that the yellow arrow points on the control panel, then come to an abrupt stop when the control handle is returned to the center position.

Note: The brakes must be able to hold the machine on any slope it is able to climb.

Test the Tilt Sensor Operation

Note: Perform this test from the ground with the platform controller. Do not stand in the platform.

39 Fully lower the platform.

40 Place a 2x4 or similar piece of wood under both crawls on one side and drive the machine up onto them.

41 Rise the platform approximately 7ft / 2.13 m.

⊙ Result: The platform should stop and the tilt alarm will sound at 180 beeps per minute. The Platform controls LED readout should display LL and the ground controls LCD should display LL Machine Inclined.

42 Press the drive function button.

43 Press and hold the function enable switch on the control handle.

44 Move the control handle in the direction indicated by the blue arrow, then move the control handle in the direction indicated by the yellow arrow.

⊙ Result: The drive function should not work in either direction.

45 Lower the platform and remove both pieces of wood.

Inspections

Test Drive Tilt Cutout

Note: Perform this test from the ground with the platform controller. Do not stand in the platform.

46 Fully lower the platform.

47 Drive the machine onto a slope where the chassis angle is greater than 1.5°side to side.

48 Raise the platform to approximately 9 ft/2.74 m.

⊙ Result: The platform should stop and the tilt alarm will sound at 180 beeps per minute. The platform controls LED readout should display LL and ground controls LCD should display LL: Machine Inclined.

49 Press the drive function button.

50 Press and hold the function enable switch on the control handle.

51 Move the control handle in the direction indicated by the blue arrow, then move the control handle in the direction indicated by the yellow arrow.

⊙ Result: The drive function should not work in either direction.

52 Fully lower the platform.

53 Drive the machine.

⊙ Result: The machine should drive.

54 Drive the machine onto a slope where the chassis angle is greater than 2°front to back.

55 Raise the platform to approximately 9 ft/2.74m.

⊙ Result: The platform should stop and the tilt alarm will sound at 180 beeps per minute. The platform controls LED readout should display LL and ground controls LCD should display LL: Machine Inclined.

56 Press the drive function button.

57 Press and hold the drive/steer function enable switch on the control handle.

58 Move the control handle in the direction indicated by the blue arrow, then move the control handle in the direction indicated by the yellow arrow.

⊙ Result: The drive function should not work in either direction.

59 Fully lower the platform.

60 Drive the machine.

⊙ Result: The machine should drive.

Inspections

Do Not Operate Unless：

☑ You learn and practice the principles of safe machine operation contained in this operator's manual.

1 Avoid hazardous situations.

2 Always perform a pre-operation inspection.

3 Always perform function tests prior to use.

4 Inspect the workplace.

Know and understand the workplace inspection before going on to the next section.

5 Only use the machine as it was intended.

Workplace Inspection Fundamentals

The workplace inspection helps the operator determine if the workplace is suitable for safe machine operation. It should be performed by the operator prior to moving the machine to the workplace.

It is the operator's responsibility to read and remember the workplace hazards, then watch for and avoid them while moving, setting up, and operating the machine.

Workplace Inspection Checklist

Be aware of and avoid the following hazardous situations:

- ❑ Drop-offs or holes
- ❑ Bumps, floor obstructions, or debris
- ❑ Sloped surfaces
- ❑ Unstable or slippery surfaces
- ❑ Overhead obstructions and high voltageconductors
- ❑ Hazardous locations
- ❑ Inadequate surface support to withstand all load forces imposed by the machine
- ❑ Wind and weather conditions
- ❑ The presence of unauthorized personnel
- ❑ Other possible unsafe conditions

Inspections

Inspection for Decals with Symbols

TS06E

Determine whether the decals on your machine have words or symbols. Use the appropriate inspection to verify that all decals are legible and in place.

Part No.	Decal Description	Qty
607110000110	Manual box	1
607110000112	Operating instructions	1
607110000111	Reference manual	1
607110000011	CE	1
607110000012	Lifting eye	4
607110000013	Transport Tie down	4
607110000014	Forklift holes	2
607110000015	Danger of tipping, tilt switch	1
607110000191	Nameplates	1
607110000017	Safely brake release and operating instructions	1
607110000018	Direction arrow	2
607110000115	Crushing hazard	2
607110000116	Crushing hazard	2
607110000204	Emergency lowering	1
607110000023	Danger of electric shock, plug	1
607110000024	Charger power	1
607110000026	Use safety arm	2
607110000027	Safety of battery and chargers	1
607110000028	Electrocution shock	2
607110000030	Transport diagram	2
607110000031	Safety arm	1
607110000032	Anchor point	4

Part No.	Decal Description	Qty
607110000033	Power to platform,230V	2
607110000035	Maintenance warehouse	1
607110000213	Danger of tipping, battery	1
607110000184	ECU	1
607110000042	IPAF	1
607110000132	Brake release	1
607110000054	Warning tape，	2
607110000212	Track load capacity,FS0610T	2
607110000399	0610TLGeneral diagram of English decals	1
607110000384	Model：FS0610TL	2
607110000070	LOGO,SWIFT EQUIP	2
607110000183	Qr code LOGO	1
607110000365	Outrigger load capacity	4
607110000252	Danger of crushing， Outrigger	4

Operating Instructions

Do Not Operate Unless：

☑ You learn and practice the principles of safe machine operation contained in this operator's manual.

1 Avoid hazardous situations.

2 Always perform a pre-operation inspection.

3 Always perform function tests prior to use.

4 Inspect the workplace.

5 **Only use the machine as it was intended.**

Fundamentals

The Operating Instructions section provides instructions for each aspect of machine operation. It is the operator's responsibility to follow all the safety rules and instructions in the operator's, safety, and responsibilities manuals.

Using the machine for anything other than lifting personnel, along with their tools and materials, to an aerial work site is unsafe and dangerous.

Only trained and authorized personnel should be permitted to operate a machine. If more than one operator is expected to use a machine at different times in the same work shift, they must all be qualified operators and are all expected to follow all safety rules and instructions in the operator's, safety, and responsibilities manuals. That means every new operator should perform a pre-operation inspection, function tests, and a workplace inspection before using the machine.

Operating Instructions

Emergency Stop

Push in the red Emergency Stop button to the off position at the ground controls or the platform controls to stop all functions.
Repair any function that operates when either red Emergency Stop button is pushed in.

Auxiliary Lowering

Pull the auxiliary lowering knob to lower the platform.

Operation from Ground

1 Be sure the battery pack is connected before operating the machine.
2 Turn the key switch to ground control.
3 Pull out both ground and platform red Emergency Stop buttons to the on position.

Operation from Platform

1 Be sure the battery pack is connected before operating the machine.
2 Turn the key switch to platform control.
3 Pull out both ground and platform red Emergency Stop buttons to the on position.

Operating Instructions

To Steer

1 Press the drive function button. On the LED screen, a circle below the drive function symbol will turn on.

If the control handle is not moved within seven seconds of pushing the drive function button, the circle below the drive function symbol will turn off and drive function will not operate. Press the drive function button again.

2 Press and hold the foot switch (if equipped).

3 Turn the steer wheels with the thumb rocked switch located on the top of control handle.

To Drive

1 Press the drive function button. On the LED screen, a circle below the drive function symbol will turn on.

If the control handle is not moved within seven seconds of pushing the drive function button, the circle below the drive function symbol will turn off and drive function will not operate. Press the drive function button again.

2 Machines equipped with foot switch: Press and hold the foot switch and press and hold the function enable switch on the control handle at the same time.

3 Increase speed: Slowly move the control handle off center.

Decrease speed: Slowly move the control handle toward center.

Stop: Return the control handle to center or release the function enable switch.

Use the color-coded direction arrows on the platform controls and on the platform to identify the direction the machine will travel.

Machine travel speed is restricted when the platform is raised.

Battery condition will affect machine performance. Machine drive speed and function speed will drop when the battery level indicator is flashing.

Operating Instructions

To select drive speed

The drive controls can operate in two different drive speed modes. When the drive speed button light is on, slow drive speed mode is active. When the button light is off, fast drive speed mode is active.

Press the drive speed button to select the desired drive speed.

Note: When the platform is elevated, the drive speed button light is always on, indicating elevated drive speed.

⚠ Driving on a slope

Determine the slope and side slope ratings for the machine and determine the slope grade.

Maximum slope rating, stowed position:

TS06E	30%	16.7°

Maximum side slope rating, stowed position:

TS06E	30%	16.7°

Note: Slope rating is subject to ground conditions with one person in the platform and adequate traction. Additional platform weight may reduce slope rating.

To determine the slope grade:

Measure the slope with a digital inclinometer OR use the following procedure.

You will need:

- Carpenter's level
- Straight piece of wood, at least 3 feet/1 m long
- Tape measure

Lay the piece of wood on the slope.

At the downhill end, lay the level on the top edge of the piece of wood and lift the end until the piece of wood is level.

While holding the piece of wood level, measure the vertical distance from the bottom of the piece of wood to the ground.

Divide the tape measure distance (rise) by the length of the piece of wood (run) and multiply by 100.

Example:

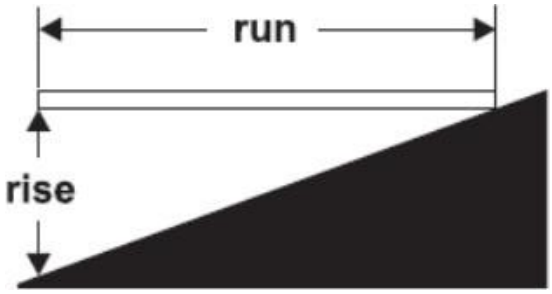

Piece of wood = 144 inches (3.6m)

Run = 144 inches (3.6m)

Rise = 12 inches (0.3m)

12 in ÷ 144 in = 0.083 x 100 = 8.3% grade

0.3 m ÷ 3.6 m = 0.083 x 100 = 8.3% grade

If the slope exceeds the maximum slope or side slope rating, then the machine must be winched or transported up or down the slope. See Transport and Lifting section.

Operating Instructions

Operational indicator codes

If the platform controls LED or ground controls LCD diagnostic readout displays an operational indicator code such as LL, the fault condition must be repaired or removed before resuming machine operation. Push in and pull out the red Emergency Stop button to reset the system.

LED Readout

LCD Readout

Operational Indicator Codes

Code	Condition
LL	Off-Level
OL	Platform Overloaded
CH	Chassis Mode Operation

For further information, please consult the appropriate Swift Equipment Manual. A code and a description of a code can also be viewed at theground controls LCD display.

Platform Overload

If the platform controls LED diagnostic readout displays a flashing OL and the ground controls LCD diagnostic readout displays OL: Platform Overloaded, the platform is overloaded and on functions will operate. An alarm will sound.

1 Push in the red Emergency Stop button to the off position.
2 Remove weight from the platform.
3 Pull out the red Emergency Stop button to the on position.

LED Readout

LCD Readout

When the platform is being raised or lowered, a self-check function will be performed near maximum height. The machine may stop and an alarm may sound. If the machine is not overloaded, normal operation will resume.

Overload Recovery

If the ground controls LCD diagnostic readout displays Overload Recovery, the auxiliary lowering system has been used while the platform was overloaded. For information on how to reset the message, please consult the appropriate Swift Equipment Manual.

Operating Instructions

Tilt Sensor Activation Settings

	Chassis Angle (side to side)	Chassis Angle (front to back)
TS06E	1.5°	2°

If the tilt alarm sounds while raising the platform, lower the platform and move the machine to a firm, level surface. If the tilt alarm sounds when the platform is raised, use extreme caution to lower the platform.

When the platform controls LED readout displays LL, the ground controls LCD displays LL: Machine Inclined, and the tilt alarm sounds at 180 beeps per minute, the following functions are affected: drive, steer, and elevate functions are disabled.

Return the machine to level ground to restore lift functions.

Operation from Ground with Controller

Maintain safe distances between the operator, machine and fixed objects.

Be aware of the direction the machine will travel when using the controller.

Battery Level Indicator

Use the LED diagnostic readout to determine the battery level.

Note: When a blinking LO code appears on the platform controls LED display, the machine must be taken out of service and charged, otherwise all machine functions will be disabled.

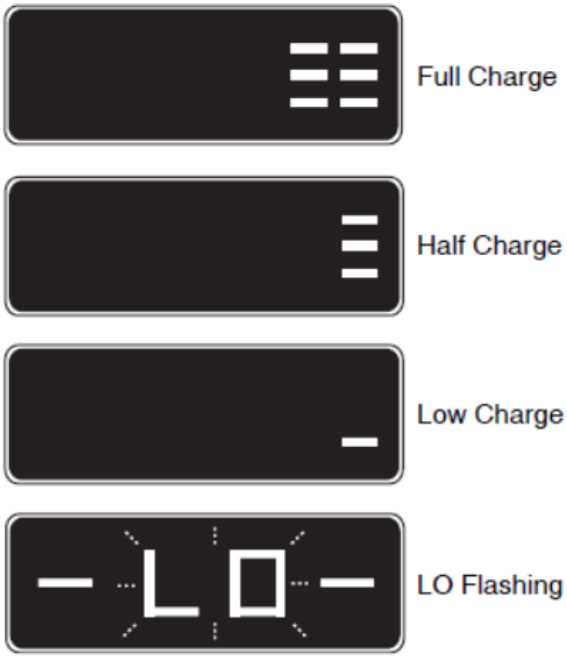

Operating Instructions

How to Use the Safety Arm

1 Raise the platform approximately 8ft/2.4 m to 13 ft/4.0 m from the ground.
2 Rotate the safety arm away from the machine and let it hang down.
3 Lower the platform until the safety arm rests securely on the link. Keep clear of the safety arm when lowering the platform.

How to Fold Down the Guardrails

The platform railing system consists of one-fold down rail section for the extension deck and one section for the main deck. All sections are held in place by four wire lock pins.

1 Fully lower the platform and retract the platform extension.
2 Remove the platform controls.
⚠ Fall hazard. Use caution and always maintain a firm footing on the platform floor while folding the guard rails.
3 From inside the platform, remove the two extension deck lock pins.
⚠ Keep hands free of pinch points.
4 From the middle of the extension deck railing, fold down the extension deck rail assembly toward the rear of the unit.
5 At the rear of the main deck, remove the two main deck lock pins.
⚠ Keep hands free of pinch points.
6 From the middle of the unit, fold down the main deck railing assembly toward the front of the unit.
7 Remove the lock pin from the entry swing tube. Raise and step through the entry swing tube, lower the entry swing tube, and insert the lock pin.
8 Carefully open the gate and exit the platform.
9 Insert the four lock pins back into each side rail bracket.

Note: To assist in the removal and replacement of the wire lock pins, pull or push back on the railing to compress the rubber bumpers.

How to Raise the Guardrails

Follow the fold down instructions but in reverse order, ensuring all lock pins are in place and installed pro

Operating Instructions

Battery and Charger Instructions

Observe and Obey:

- ☑ Do not use an external charger or booster battery.
- ☑ Charge the battery in a well-ventilated area.
- ☑ Use proper AC input voltage for charging as indicated on the charger.
- ☑ Use only a Swift Equipment authorized battery andcharger.

To Charge Battery

1 Be sure the batteries are connected before charging the batteries.

Maintenance-free batteries

1 Connect the battery charger to a grounded AC circuit.
2 The charger will indicate when the battery is fully charged.

Standard Batteries

1 Remove the battery vent caps and check the battery acid level. If necessary, add only enough distilled water to cover the plates. Do not overfill prior to the charge cycle.
2 Replace the battery vent caps.
3 Connect the battery charger to a grounded AC circuit.
4 The charger will indicate when the battery is fully charged.
5 Check the battery acid level when the charging cycle is complete. Replenish with distilled water to the bottom of the fill tube. Do not overfill.

After Each Use

1 Select a safe parking location–firm level surface, clear of obstruction and traffic.
2 Lower the platform.
3 Turn the key switch to the off position and remove the key to secure from unauthorized use.
4 Charge the batteries.

Operating Instructions

Fault code

The codes displayed on the LED display indicate the operation status and related faults of the machine. The fault codes listed in the table below describe the fault condition of the machine, which is helpful to accurately find the fault parts or areas, so as to smoothly remove the fault.

Display	Description	Machine reaction
01	System Initialization Fault	Disables All Motion
02	System Communication Fault	Disables All Motion
03	Invalid Option setting Fault	Disables All Motion
12	Chassis Toggle Switch ON at power-up Fault	Disable Chassis Control
18	Pothole Guard Fault	Disable Lifting and Driving
31	Pressure Sensor Fault	Disables All Motion
32	Angle Sensor Fault	Disables All Motion
36	Pro-Low Voltage Fault	Disables fast drive and up
42	Platform Left Turn Switch ON at power-up Message	Diagnostic Message Only
43	Platform Right Turn Switch ON at power-up Message	Diagnostic Message Only
46	Platform Joystick Enable Switch ON at power-up Fault	Disable Platform Control
47	Platform Joystick not in neutral at power-up Message	Lift Slows to Elevated Speed
54	Lift Up Coil Fault	Disable Lifting and Driving
55	Lift Down Coil Fault	Disable Lifting and Driving
58	General Brake Coil Fault	Disable Lifting and Driving
59	Lift Up contactor Fault (only the big tracked lift has this fault)	Disable Lifting and Driving
68	Low Voltage Fault	Disable All Motion
80	Over 80% Load Warning	Warning Only
90	Over 90% Load Warning	Warning Only
99	Over 99% Load Warning	Warning Only
OL	Overloaded Platform Fault	Disable All Motion
LL	Machine Tilted Beyond Safe Limits Fault	Disable Lifting and Driving

Operating Instructions

Maintenance guide

Display	Description
01	System Initialization Fault: ECU may be malfunctioning, replace it.
02	System Communication Fault: Check communications cable connections and other wiring. If that does not resolve the problem, try replacing the PCU or ECU.
03	Invalid Option setting Fault: Set appropriate option for this lift.
12	Chassis Toggle Switch ON at power-up Fault: Check wires to the Toggle Switch or look for a stuck Toggle Switch.
18	Pothole Guard Fault: Check that the pothole guards are extended, check the pothole limit switches. Check wires to the switches, check the down limit switch and connections.
31	Pressure Sensor Fault: Check the wiring to the sensor and then the sensor itself. Also check to make sure that the correct option is properly selected (or not) for load sensing.
32	Angle Sensor Fault: Check the wiring to the sensor and then the sensor itself. Also check to make sure that the correct option is properly selected (or not) for load sensing
36	Pro-Low Voltage Fault: The lift can only dive in low mode, and cannot lift up, can move down. The operator should go to charge the battery as soon as possible.
42	Platform Left Turn Switch ON at power-up Message: Ensure that nothing is holding the Joystick Toggle Switches down. If OK, consider replacing the Joystick or PCU.
43	Platform Right Turn Switch ON at power-up Message: Ensure that nothing is holding the Joystick Toggle Switches down. If OK, consider replacing the Joystick or PCU.
46	Platform Joystick Enable Switch ON at power-up Fault: Ensure that nothing is holding the Enable switch closed. If OK, consider replacing the Joystick or PCU.
47	Platform Joystick not in neutral at power-up Message: Make sure that the Joystick is in the neutral (upright) position. Check the neutral zone parameter setting in the LabView Programmer. If it's OK, consider replacing the Joystick or the PCU.
54	Lift Up Coil Fault: Check the connections to the Coil's terminals and make sure they are tight. If so, check the coil itself to see if it is open or shorted.
55	Lift Down Coil Fault: Check the connections to the Coil's terminals and make sure they are tight. If so, check the coil itself to see if it is open or shorted.
58	General Brake Coil Fault: Check the connections to the Coil's terminals and make sure they are tight. If so, check the coil itself to see if it is open or shorted.
59	Lift Up contactor Fault: Check the connections to the contactor and make sure they are tight. If so, check the contactor itself to see if it is open or shorted.
68	Low Voltage Fault: Check battery voltage and charge if necessary. Check the battery connections and tight or clean. Check the voltage to the ECU and PCU.
80	Over 80% Load Warning: Platform is getting close to its limit of weight. Consider not adding more load.

90	Over 90% Load Warning: Platform is getting close to its limit of weight. Consider not adding more load.

Operating Instructions

Display	Description
99	Over 99% Load Warning: Platform has reached its limit of weight. Do not add more load.
OL	Overloaded Platform Fault: Remove the excess load immediately.
LL	Machine Tilted Beyond Safe Limits Fault: If the machine is tilted, find a way to make it level. If the machine is level, check the wiring to the tilt sensor and then the sensor itself.

Operating Instructions

Machine running fault code for TS06E

F2T-M1 (0x26) left motor fault code

Flash Code	Fault Name	Flash Cod	Fault Name
0x12	Controller Overcurrent	0x39	Main Contactor Did Not Close
0x13	Current Sensor	0x3A	MOTOR_SETUP_NEEDED
0x14	Pre charge Failed	0x3B	MISALIGNMENT_ERROR
0x15	Controller Severe Under temperature	0x42	Throttle Input
0x16	Controller Severe Over temperature	0x44	Brake Input
0x17	Severe B+ Under voltage	0x45	STEER_ANGLE_INPUT
0x17 0x18	Severe KSI Under voltage Severe B+ Overvoltage	0x46 0x47	NV Memory Failure HPD Sequencing
0x18	Severe KSI Overvoltage	0x47	EMR Rev HPD
0x19	Speed Limit Supervision	0x47	Pump HPD
0x1A	Travel Control Supervision	0x48	FOLLOWING_ERROR
0x1B	CRITICAL_OS_GENERAL	0x49	Parameter Change
0x1C	OS_GENERAL_2	0x4A	EMR Switch Redundancy
0x1D	RESET_REJECTED	0x68	VCL Run Time Error
0x22	Controller Over temperature Cutback	0x71	OS_GENERAL
0x23	Under voltage Cutback	0x72	PDO Timeout
0x24	Overvoltage Cutback	0x73	Stall Detected
0x25	Ext 5V Supply Failure	0x74	FAULT_ON_OTHER_TRACTION_CON TROLLER
0x26 0x28	Ext 12V Supply Failure Motor Temp Hot Cutback	0x75 0x76	DUAL_SEVERE INSULATION_RESISTANCE_LOW
0x29	Motor Temp Sensor	0x77	Supervision
0x31	Main Driver	0x79	Supervision Input Check
0x32	EM Brake Driver	0x82	PDO Mapping Error
0x34	Load Hold Driver Fault	0x83	Internal hardware
0x35	Lower Driver	0x87	Motor Characterization Error
0x36	Encoder Fault	0x88	Encoder Pulse Error
0x37	Motor Open	0x89	Parameter Out Of Range
0x38	Main Contactor Welded	0x91	Bad Firmware

Operating Instructions

Flash Code	Fault Name	Flash Cod	Fault Name
0x92	EM Brake Failed to Set	0xB9	Analog 9 Out of Range
0x93	Encoder LOS	0xBB	Analog 14 Out of Range
0x94	Emer Rev Timeout	0xBC	Analog Assignment
0x95	Pump Overcurrent	0xBD	Analog 18 Out of Range
0x96	Pump BDI	0xBE	Analog 19 Out of Range
0x97	Pump Hardware	0xBF	Pump Current Sensor
0x99	PARAMETER_MISMATCH	0xC1	Branding Error
0x9A	Interlock Braking Supervision	0xC2	BMS_CUTBACK
0x9B	EMR Supervision	0xC3	DIFFERENTIAL_STEERING
0xA1	Driver 1 Fault	0xC4	PWM_DRIVER_COUNT
0xA2	Driver 2 Fault	0xC5	PWM_INPUT_10_OUT_OF_RANGE
0xA3	Driver 3 Fault	0xC6	PWM_INPUT_17_OUT_OF_RANGE
0xA4	Driver 4 Fault	0xC5	PRIMARY_COMMAND_INPUT
0xA5	Driver 5 Fault	0xC7	ANALOG_31_OUT_OF_RANGE
0xA6	Driver 6 Fault	0xC8	INVALID_CAN_PORT
0xA7	Driver 7 Fault	0xC9	VCL_WATCHDOG
0xA8	Driver Assignment	0xCA	TORQUE_INPUT
0xA9	Coil Supply Fault	0xCB	PWM_INPUT_28_OUT_OF_RANGE
0xB1	Analog 1 Out of Range	0xCC	PWM_INPUT_29_OUT_OF_RANGE
0xB2 0xB3	Analog 2 Out of Range Analog 3 Out of Range	0xCF 0XD1	FORCE_FEEDBACK_FAULT LIFT_INPUT_FAULT
0xB4	Analog 4 Out of Range	0xD2	PHASE_PWM_MISMATCH
0xB5	Analog 5 Out of Range	0xD3	Hardware Compatibility
0xB6	Analog 6 Out of Range	0XD4	LOWER_INPUT_FAULT
0xB7	Analog 7 Out of Range	0XD7	PRIMARY_FEEDBACK_INPUT
0xB8	Analog 8 Out of Range		

Operating Instructions

F2T-M2 (0x27) right motor fault code

Flash Code	Fault Name	Flash Cod	Fault Name
0x12	Controller Overcurrent	0x3B	MISALIGNMENT_ERROR
0x13	Current Sensor	0x42	Throttle Input
0x14	Pre charge Failed	0x44	Brake Input
0x15	Controller Severe Under temperature	0x45	STEER_ANGLE_INPUT
0x16	Controller Severe Over temperature	0x46	NV Memory Failure
0x17	Severe B+ Under voltage	0x47	HPD Sequencing
0x17	Severe KSI Under voltage	0x47	EMR Rev HPD
0x18	Severe B+ Overvoltage	0x48	FOLLOWING_ERROR
0x18	Severe KSI Overvoltage	0x49	Parameter Change
0x19	Speed Limit Supervision	0x4A	EMR Switch Redundancy
0x1A	Travel Control Supervision	0x68	VCL Run Time Error
0x1B	CRITICAL_OS_GENERAL	0x71	OS_GENERAL
0x1C	OS_GENERAL_2	0x72	PDO Timeout
0x1D	RESET_REJECTED	0x73	Stall Detected
0x22	Controller Over temperature Cutback	0x74	FAULT_ON_OTHER_TRACTION_CONTROLLER
0x23	Under voltage Cutback	0x75	DUAL_SEVERE
0x24	Overvoltage Cutback	0x76	INSULATION_RESISTANCE_LOW
0x25	Ext 5V Supply Failure	0x77	Supervision
0x26	Ext 12V Supply Failure	0x79	Supervision Input Check
0x28	Motor Temp Hot Cutback	0x82	PDO Mapping Error
0x29	Motor Temp Sensor	0x83	Internal hardware
0x31	Main Driver	0x87	Motor Characterization Error
0x32	EM Brake Driver	0x88	Encoder Pulse Error
0x34	Load Hold Driver Fault	0x89	Parameter Out Of Range
0x35	Lower Driver	0x91	Bad Firmware
0x36	Encoder Fault	0x92	EM Brake Failed to Set
0x37	Motor Open	0x93	Encoder LOS
0x38	Main Contactor Welded	0x94	Emer Rev Timeout
0x39	Main Contactor Did Not Close	0x99	PARAMETER_MISMATCH

0x3A	MOTOR_SETUP_NEEDED	0x9A	Interlock Braking Supervision

Operating Instructions

Flash Code	Fault Name	Flash Cod	Fault Name
0x9B	EMR Supervision	0xBD	Analog 18 Out of Range
0xA1	Driver 1 Fault	0xBE	Analog 19 Out of Range
0xA2	Driver 2 Fault	0xC1	Branding Error
0xA3	Driver 3 Fault	0xC2	BMS_CUTBACK
0xA4	Driver 4 Fault	0xC3	DIFFERENTIAL_STEERING
0xA5	Driver 5 Fault	0xC4	PWM_DRIVER_COUNT
0xA6	Driver 6 Fault	0xC5	PWM_INPUT_10_OUT_OF_RANGE
0xA7	Driver 7 Fault	0xC6	PWM_INPUT_17_OUT_OF_RANGE
0xA8	Driver Assignment	0xC5	PRIMARY_COMMAND_INPUT
0xA9	Coil Supply Fault	0xC7	ANALOG_31_OUT_OF_RANGE
0xB1	Analog 1 Out of Range	0xC8	INVALID_CAN_PORT
0xB2	Analog 2 Out of Range	0xC9	VCL_WATCHDOG
0xB3	Analog 3 Out of Range	0xCA	TORQUE_INPUT
0xB4	Analog 4 Out of Range	0xCB	PWM_INPUT_28_OUT_OF_RANGE
0xB5	Analog 5 Out of Range	0xCC	PWM_INPUT_29_OUT_OF_RANGE
0xB6	Analog 6 Out of Range	0xCF	FORCE_FEEDBACK_FAULT
0xB7	Analog 7 Out of Range	0XD1	LIFT_INPUT_FAULT
0xB8	Analog 8 Out of Range	0xD2	PHASE_PWM_MISMATCH
0xB9	Analog 9 Out of Range	0xD3	Hardware Compatibility
0xBB	Analog 14 Out of Range	0XD4	LOWER_INPUT_FAULT
0xBC	Analog Assignment	0XD7	PRIMARY_FEEDBACK_INPUT

For more information, please contact the sales/service department of Swift Equipment

Transport and Lifting Instructions

Observe and Obey:

- ☑ Swift Equipment provides this securement information as a recommendation. Driversare solely responsible for making sure machines are properly secured.
- ☑ Swift Equipment customers needing to containerizeany lift or Swift Equipment product should source aqualified freight forwarder with expertise inpreparing, loading and securing construction and lifting equipment for international shipment.
- ☑ Only qualified mobile elevating work platform operators should move the machine on or off the truck.
- ☑ The transport vehicle must be parked on a level surface.
- ☑ The transport vehicle must be secured to prevent rolling while the machine is being loaded.
- ☑ Be sure the vehicle capacity, loading surfaces and chains or straps are sufficient to withstand the machine weight. Swift Equipment lifts are very heavy relative to their size. See the serial label for the machine weight.
- ☑ The machine must be on a level surface or secured before releasing the brakes.
- ☑ Do not allow the rails to fall when the snap pins are removed. Maintain a firm grasp on the rails when the rails are lowered.
- ☑ Do not drive the machine on a slope that exceeds the uphill, downhill or side slope rating. See Driving on a Slope in the Operating Instructions section.
- ☑ If the slope of the transport vehicle bed exceeds the uphill or downhill maximum slope rating, the machine must be loaded and unloaded using a winch or forklift as described in the brake release operation. See the Specifications section for the slope ratings.

Transport and Lifting Instructions

Securing to Truck or Trailer for Transit

Always use the extension deck lock when the machine is transported.

Turn the key switch to the off position and remove the key before transporting.

Inspect the entire machine for loose or unsecured items.

Use chains or straps of ample load capacity.

Use a minimum of 2 chains or straps.

Adjust the rigging to prevent damage to the chains.

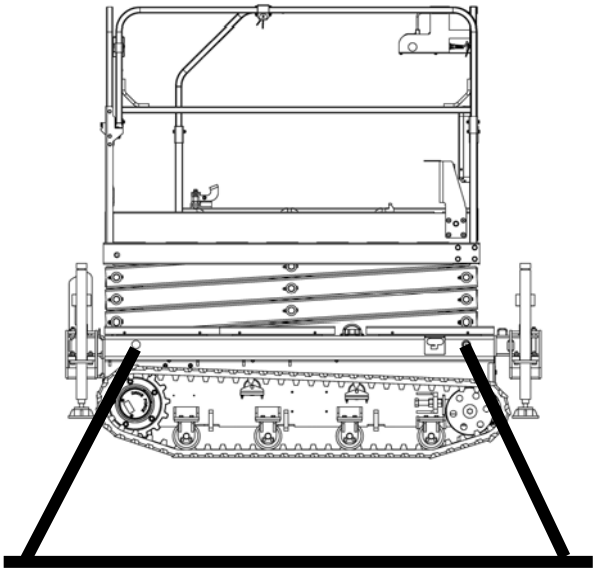

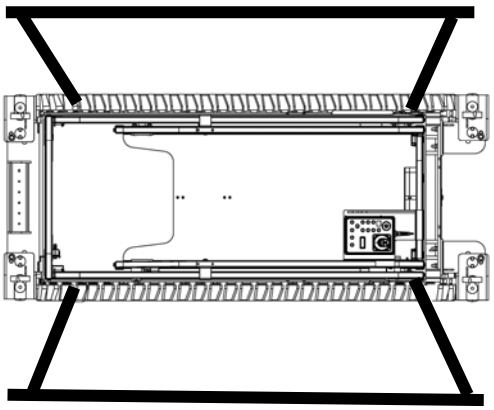

Transport and Lifting Instructions

Observe and Obey:

- ☑ Only qualified riggers should rig and lift the machine.
- ☑ Only qualified forklift operators should lift the machine with a forklift.
- ☑ Be sure the crane capacity, loading surfaces and straps or lines are sufficient to withstand the machine weight. See the serial label for the machine weight.

Lifting the Machine with a Forklift

Be sure the extension deck, controls and component trays are secure. Remove all loose items on the machine.

Fully lower the platform. The platform must remain lowered during all loading and transport procedures.

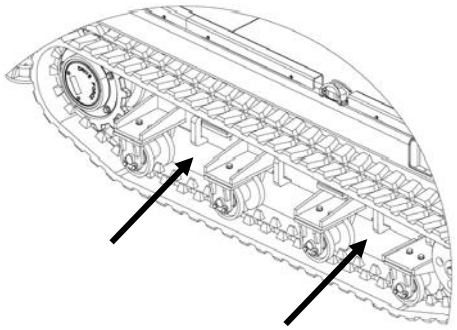

Position the forklift forks in position with the forklift pockets.

Drive forward to the full extent of the forks.

Raise the machine 16 in / 0.4 m and then tilt the forks back slightly to keep the machine secure.

Be sure the machine is level when lowering the forks.

NOTICE Lifting the machine from the bottom can result in component damage.

Specifications

TS06E

Height, working maximum	8m
Height, platform maximum	6m
Height, stowed maximum Railing raised	2.14m
Height, stowed maximum Railing lowered	1.67m
Width with standard wheels	0.96m
Length, stowed	2.27m
Platform extension length	0.89 m
Platform dimensions (length x width)	1.8x0.97m
Maximum load capacity	230kg
Maximum wind speed	12.5m/s
Wheelbase	0m
Turning radius (outside)	0m
Turning radius (inside)	0m
Ground clearance	145mm
Weight (Machine weights vary with option configurations. See serial label for specific machine weight.)	1860kg
Power source	4Batterys, 12V85AH
System voltage	24V
AC outlet in platform	Standard
Maximum hydraulic pressure (functions)	240Bar
Track size	180x72

Airborne noise radiation	
Sound pressure levels in ground workspaces	<70dBA
Sound pressure level of the Platform workspace	<70dBA
Maximum slope rating, stowed position	30%（17°）
Maximum side slope rating, stowed position	30%(17°)
Note: Slope ratings are limited by ground conditions and sufficient traction.	
Maximum working slope	1.5° / 2°
Longitudinal Levelling Front	+/-10.37°
Longitudinal Levelling Rear	+/-10.44°
Lateral Levelling	+/-19.17°
Drive speed	
Speed of travel when the platform is closed	2.0km/h
Speed of travel when the platform rises	0.0km/h
Floor loading information	
Tire load maximum	950kg
Tire contact pressure	293kPa
Occupied floor pressure	2.93kPa
Note: Ground hosting information is approximate and does not include different optional configuration factors. This information can only be used if there is a sufficiently high safety factor.	

Maintenance

Observe and Obey:

√ Only routine maintenance items specified in this manual shall be performed by the operator.

√ Scheduled maintenance inspections shall be completed by qualified service technicians, according to the manufacturer's specifications and the requirements specified in this manual.

Maintenance Symbols Legend

NOTICE The following symbols have been used in this manual to help communicate the intent of the instructions. When one or more of the symbols appear at the beginning of a maintenance procedure, it conveys the meaning below.

Indicates that tools will be required to perform this procedure.

Indicates that new parts will be required to perform this procedure.

Indicates that dealer service will be required to perform this procedure.

Pre-delivery Preparation Report

The pre-delivery preparation report contains checklists for each type of scheduled inspection.

Make copies of the Pre-delivery Preparation report to use for each inspection. Store completed forms as required.

Maintenance Schedule

There are five types of maintenance inspections that must be performed according to a schedule— daily, quarterly, semi-annually, annually, and every two years. The Scheduled Maintenance Procedures Section and the Maintenance Inspection Report have been divided into five subsections—A, B, C, D, and E. Use the following chart to determine which group(s) of procedures are required to perform a scheduled inspection.

Inspection	Checklist
Daily or every 8 hours	A
Quarterly or every 250 hours	A+B
Semi-annually or every 500 hours	A+B+C
Annually or every 1000 hours	A+B+C+D
Two year or every 2000 hours	A+B+C+D+E

Maintenance Inspection Report

The maintenance inspection report contains checklists for each type of scheduled inspection.

Make copies of the Maintenance Inspection Report to use for each inspection. Maintain completed forms for a minimum of 4 years or in compliance with your employer, jobsite and governmental regulations and requirements.

Maintenance

Pre-delivery Preparation Report

Fundamentals

It is the responsibility of the dealer to perform the Pre-delivery Preparation.

The Pre-delivery Preparation is performed prior to each delivery. The inspection is designed to discover if anything is apparently wrong with a machine before it is put into service.

A damaged or modified machine must never be used. If damage or any variation from factory delivered condition is discovered, the machine must be tagged and removed from service.

Repairs to the machine may only be made by a qualified service technician, according to the manufacturer’s specifications.

Scheduled maintenance inspections shall be performed by qualified service technicians, according to the manufacturer’s specifications and the requirements listed in this manual.

Instructions

Use the operator’s manual on your machine.

The Pre-delivery Preparation consists of completing the Pre-operation Inspection, the Maintenance items and the Function Tests.

Use this form to record the results. Place a check in the appropriate box after each part is completed. Follow the instructions in the operator’s manual.

If any inspection receives an N, remove the machine from service, repair and re-inspect it. After repair, place a check in the R box.

Legend

Y = yes, completed

N = no, unable to complete

R = repaired

Comments

Pre-Delivery Preparation	**Y**	**N**	**R**
Pre-operation inspection completed			
Maintenance items completed			
Function tests completed			

Model
Serial number
Date
Machine owner
Inspected by (print)
Inspector signature
Inspector title
Inspector company

Maintenance Inspection Report

Model
Serial number
Date
Hour meter
Machine owner
Inspected by (print)
Inspector signature
Inspector title
Inspector company

Maintenance

Instructions

• Make copies of this report to use for each inspection.

• Select the appropriate checklist(s) for the type of inspection to be performed.

☐	Daily or 8 hours Inspection:	A
☐	Quarterly or 250 hours Inspection:	A+B
☐	Semi-annually or 500 hours Inspection:	A+B+C
☐	Annually or 1000 hours Inspection:	A+B+C+D
☐	Two year or 2000 hours Inspection:	A+B+C+D+E

• Place a check in the appropriate box after each inspection procedure is completed.

• Use the step-by-step procedures in this section to learn how to perform these inspections.

• If any inspection receives an "N", tag and remove the machine from service, repair and re-inspect it. After repair, place a check in the "R' box.

Legend

Y = yes, acceptable
N = no, remove from service
R = repaired

Checklist A	**Y**	**N**	**R**
A-1 Inspect the manuals and decals			
A-2 Pre-operation inspection			
A-3 Check the Batteries			
A-4 Check the Hydraulic Oil Level			
A-5 Function tests			
Perform after 40 hours:			
A-6 30 day service			
Perform every 100 hours:			
A-7 Grease steer yokes			
Checklist B	**Y**	**N**	**R**
B-1 Batteries			
B-2 Electrical wiring			
B-3 Tracks and gears			
B-4 Emergency stop			
B-5 Key switch			
B-6 Horn (if equipped)			
B-7 Drive brakes			
B-8 Drive speed - stowed			
B-9 Drive speed - raised			
B-10 Drive speed - slow			
B-11 Hydraulic oil analysis			
B-12 Tank venting system			
B-13 Test the down limit switch and the level Sensor			
B-14 Test the up limit switches			
Checklist C	**Y**	**N**	**R**
C-1 Platform overload (if equipped)			
C-2 Breather cap - models with optional oil			
Checklist D	**Y**	**N**	**R**
D-1 Scissor arm wear pads			
D-2 Hydraulic filter			
Checklist E	**Y**	**N**	**R**
E-1 Hydraulic oil			

Maintenance

Checklist A Procedures

A-1

Inspect the Manuals and Decals

Maintaining the operator's manual in good condition is essential to safe machine operation. Manuals are included with each machine and should be stored in the container provided in the platform. An illegible or missing manual will not provide safety and operational information necessary for a safe operating condition.

In addition, maintaining all of the safety and instructional decals are in good condition is mandatory for safe machine operation. Decals alert operators and personnel to the many possible hazards associated with using this machine. They also provide users with operation and maintenance information. An illegible decal will fail to alert personnel of a procedure or hazard and could result in unsafe operating conditions.

1 Check to make sure that the operator's manual is present and complete in the storage container on the platform.

2 Examine the pages of manual to be sure that they are legible and in good condition.

☉ Result: The operator's manual is appropriate for the machine and the manual are legible and in good condition.

¤ Result: The operator's manual is not appropriate for the machine or the manual is not in good condition or is illegible. Remove the machine from service until the manual is replaced.

3 Open the operator's manual to the decal's inspection section. Carefully and thoroughly inspect all decals on the machine for legibility and damage.

☉ Result: The machine is equipped with all required decals, and all decals are legible and in good condition.

¤ Result: The machine is not equipped with all required decals, or one or more decals are illegible or in poor condition. Remove the machine from service until the decals are replaced.

4 Always return the manual to the storage container after use.

Note: Contact SWIFT EQUIPMENT if replacement manuals or decals are needed.

Maintenance

A-2

Perform Pre-operation Inspection

Completing a Pre-operation Inspection is essential to safe machine operation. The Pre-operation Inspection is a visual inspection performed by the operator prior to each work shift. The inspection is designed to discover if anything is apparently wrong with a machine before the operator performs the function tests. The Pre-operation Inspection also serves to determine if routine maintenance procedures are required.

Complete information to perform this procedure is available in the appropriate operator's manual. Refer to the operator's manual on your machine.

A-3

Check the Batteries

Proper battery condition is essential to good machine performance and operational safety. Improper fluid levels or damaged cables and connections can result in component damage and hazardous conditions.

WARNING Electrocution hazard. Contact with hot or live circuits may result in death or serious injury. Remove all rings, watches and other jewellery.

WARNING Bodily injury hazard. Batteries contain acid. Avoid spilling or contacting battery acid. Neutralize battery acid spills with baking soda and water.

1 Put on protective clothing and eye wear.

2 Be sure that the battery cable connections are tight and free of corrosion.

3 Be sure that the battery hold-down bars are secure.

4 Remove the battery vent caps.

5 Check the battery acid level. If needed, replenish with distilled water to the bottom of the battery fill tube. Do not overfill.

6 Install the vent caps.

Maintenance

A-4

Check the Hydraulic Oil Level

Maintaining the hydraulic oil at the proper level is essential to machine operation. Improper hydraulic oil levels can damage hydraulic components. Daily checks allow the inspector to identify changes in oil level that might indicate the presence of hydraulic system problems.

NOTICE Perform this procedure with the platform in the stowed position.

1 Visually inspect the sight of hydraulic oil level from the side of the hydraulic oil tank.

⊙ Result: The hydraulic oil level should be at the mark of the fuel tank.

2 Add oil if necessary. Do not overfill.

NOTICE **Original Hydraulic oil specifications：L-HM32**

Customers shall choose the appropriate hydraulic oil according to the ambient temperature used.

Example: L-HM46 or L-HV68

A-5

Perform Function Tests

Completing the function tests is essential to safe machine operation. Function tests are designed to discover any malfunctions before the machine is put into service. A malfunctioning machine must never be used. If malfunctions are discovered, the machine must be tagged and removed from service.

Complete information to perform this procedure is available in the appropriate operator's manual. Refer to the operator's manual on your machine.

Maintenance

A-6

Perform 30 Day Service

The 30-day maintenance procedure is a onetime procedure to be performed after the first 30days or 40 hours of usage. After this interval, refer to the maintenance tables for continued scheduled maintenance.

Perform the following maintenance procedures:

- B-3 Inspect the Tires, Wheels and Castle Nut Torque
- D-2 Replace the Hydraulic Tank Return Filter Element

Maintenance

Checklist B Procedures

B-1

Inspect the Batteries

Swift Equipment requires that this procedure beperformed every 250 hours or quarterly,whichever comes first.

Proper battery condition is essential to good machine performance and operational safety. Improper fluid levels or damaged cables and connections can result in component damage and hazardous conditions.

WARNING Electrocution / burn hazard. Contact with electrically charged circuits could result in death or serious injury. Remove all rings, watches and other jewellery

WARNING Bodily injury hazard.

Batteries contain acid.
Avoid spilling or contacting battery acid. Neutralize battery acid spills with baking soda and water.

1 Put on protective clothing and eye wear.

2 Release the battery pack latch and rotate the battery pack out and away from the chassis.

3 Be sure that the battery cable connections are free of corrosion.

Note: Adding terminal protectors and a corrosion preventative sealant will help eliminate corrosion on the battery terminals and cables.

4 Be sure that the battery retainers and cable connections are tight.

5 Fully charge the batteries. Allow the batteries to rest 24 hours before performing this procedure to allow the battery cells to equalize.

Models without maintenance-free or sealedbatteries:

6 Remove the battery vent caps and check the specific gravity of each battery cell witha hydrometer. Note the results.

7 Check the ambient air temperature and adjust the specific gravity reading for eachcell as follows:

• Add 0.004 to the reading of each cell forevery 5.5° C above 26.7° C.

• Subtract 0.004 from the reading of each cellfor every 5.5° C below 26.7° C.

☉ Result: All battery cells display an adjusted specific gravity of 1 .277 or higher. The battery is fully charged. Proceed to step 11.

¤ Result: One or more battery cells display a specific gravity of 1.217 or below. Proceed tostep 8.

8 Perform an equalizing charge OR fully charge the batteries and allow the batteriesto rest at least 6 hours.

9 Remove the battery vent caps and check the specific gravity of each battery cell witha hydrometer. Note the results.

10 Check the ambient air temperature and adjust the specific gravity reading for eachcell as follows:

• Add 0.004 to the reading of each cell forevery 5.5° C above 26.7° C.

• Subtract 0.004 from the reading of each cellfor every 5.5° C below 26.7° C.

☉ Result: All battery cells display a specific gravity of 1.277 or greater. The battery is fully charged. Proceed to step 11.

Maintenance

¤ Result: The difference in specific gravity readings between cells is greater than 0.1 OR the specific gravity of one or more cells is less than 1.177. Replace the battery.

11 Check the battery acid level. If needed, replenish with distilled water to 3 mm below the bottom of the battery fill tube. Do not overfill.

12 Install the vent caps and neutralize any electrolyte that may have spilled.

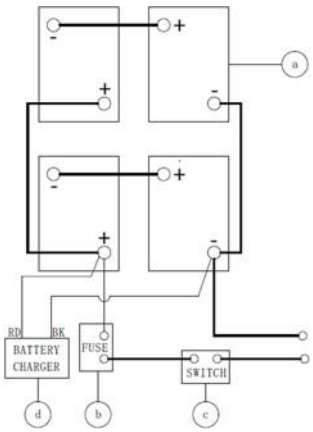

a batteries
b 300A fuse
c power switch
d battery charger

All models:

13 Check each battery pack and verify that the batteries are wired correctly.

14 Inspect the battery charger plug and pigtail for damage or excessive insulation wear. Replace as required.

15 Connect the battery charger to a properly grounded 110 - 240V / 50 – 60 Hz single phase AC power supply.

⊙ Result: The charger should operate and begin charging the batteries.

¤ Result: If, simultaneously, the charger alarm sounds and the LEDs blink, correct the charger connections at the fuse and battery. The charger will then operate correctly and begin charging the batteries.

Note: For best results, use an extension of adequate size with a length no longer than 15m.

Note: If you have any further questions regarding the battery charger operation, please contact the Swift Equipment Service Department.

Maintenance

B-2

Inspect the Electrical Wiring

Swift Equipment requires that this procedure beperformed every 250 hours or quarterly,whichever comes first.

Maintaining electrical wiring in good condition is essential to safe operation and good machine performance. Failure to find and replace burnt, chafed, corroded or pinched wires could result in unsafe operating conditions and may cause component damage.

WARNING Electrocution / burn hazard. Contact with electrically charged circuits could result in death or serious injury. Remove all rings, watches and other jewellery.

1 Inspect the underside of the chassis for damaged or missing ground strap(s).

2 Inspect the following areas for burnt, chafed, corroded and loose wires:

- Ground control panel
- Platform controls

3 Turn the key switch to ground control. Turn the ground red Emergency Stop button clockwise to the on position. Pull out the platform red Emergency Stop button to the on position.

4 Raise the platform until the distance of the two sets of scissors are at least 0.5m.

5 Lift the safety arm, move it to the center of the scissor arm and rotate down to a vertical position.

6 Lower the platform until the safety arm rests securely on the link. Keep clear of the safety arm when lowering the platform.

WARNING Crushing hazard. Keep hands clear of the safety arm when lowering the platform.

7 Inspect the center chassis area and scissor arms for burnt, chafed and pinched cables.

8 Inspect the following areas for burnt, chafed, corroded, pinched and loose wires:

- Scissor arms
- ECU to platform controls
- Power to platform wiring

9 Inspect for a liberal coating of dielectric grease in the following locations:

- Between the ECU and platform controls
- All wire harness connectors Level sensor

10 Raise the platform and return the safety arm to the stowed position.

11 Lower the platform to the stowed position and turn the machine off.

Maintenance

B-3

Inspect the Tracks and gears (including castle nut torque)

Swift Equipment requires that this procedure beperformed every 250 hours or quarterly,whichever comes first.

Maintaining the tracks and gears in good condition is essential to safe operation and good performance. Track and/or gear failure could result in a machine tip-over. Component damage may also result if problems are not discovered and repaired in a timely fashion.

1 Check the track surface and sidewalls for cuts, cracks, punctures and unusual wear.

2 Check each gear for damage, bends and cracks.

B-4

Test the Emergency Stop

Swift Equipment requires that this procedure be performed every 250 hours or quarterly, whichever comes first.

A properly functioning Emergency Stop is essential for safe machine operation. An improperly operating red Emergency Stop button will fail to shut off power and stop all machine functions, resulting in a hazardous situation.

As a safety feature, selecting and operating the ground controls will override the platform controls, except the platform red Emergency Stop button.

1 Turn the key switch to ground control. Turn the ground red Emergency Stop button clockwise to the on position. Pull out the platform red Emergency Stop button to the on position.

2 Push in the red Emergency Stop button at the ground controls to the off position.

☉ Result: No machine functions should operate.

3 Turn the key switch to platform control. Turn the ground red Emergency Stop button clockwise to the on position. Pull out the platform red Emergency Stop button to the on position.

4 Push in the red Emergency Stop button at the platform controls to the off position.

☉ Result: No machine functions should operate.

Note: The red Emergency Stop button at the ground controls will stop all machine operation, even if the key switch is switched to platform

control.

Maintenance

B-5

Test the Key Switch

Swift Equipment requires that this procedure beperformed every 250 hours or quarterly,whichever comes first.

Proper key switch action and response is essential to safe machine operation. The machine can be operated from the ground or platform controls and the activation of one or the other is accomplished with the key switch. Failure of the key switch to activate the appropriate control panel could cause a hazardous operating situation.

Perform this procedure from the ground using the platform controls. Do not stand in the platform.

1 Turn the ground red Emergency Stop button clockwise to the on position. Pull out the platform red Emergency Stop button to the on position.

2 Turn the key switch to platform control.

3 Check the platform up/down function from the ground controls.

☉ Result: The machine functions should not operate.

4 Turn the key switch to ground control.

5 Check the machine functions from the platform controls.

☉ Result: The machine functions should not operate.

6 Turn the key switch to the off position.

☉ Result: No function should operate.

B-6

Test the Automotive-style Horn (if equipped)

Swift Equipment requires that this procedure be performed every 250 hours or quarterly, whichever comes first.

The horn is activated at the platform controls and sounds at the ground as a warning to ground personnel. An improperly functioning horn will prevent the operator from alerting ground personnel of hazards or unsafe conditions.

1 Turn the key switch to platform control. Turn the ground red Emergency Stop button clockwise to the on position. Pull out the platform red Emergency Stop button to the on position.

2 Push down the horn button at the platform controls.

☉ Result: The horn should sound.

Maintenance

B-7

Test the Drive Brakes

Swift Equipment requires that this procedure beperformed every 250 hours or quarterly,whichever comes first.

Proper brake action is essential to safe machine operation. The drive brake function should operate smoothly, free of hesitation, jerking and unusual noise. Hydraulically released individual wheel brakes can appear to operate normally when not fully operational.

Perform this procedure with the machine on a firm level surface that is free of obstructions, with the platform extension deck fully retracted and the platform in the stowed position.

1 Mark a test line on the ground for reference.

2 Turn the key switch to platform control. Turn the ground red Emergency Stop button clockwise to the on position. Pull out the platform red Emergency Stop button to the on position.

3 Lower the platform to the stowed position.

4 Press the drive function select button.

5 Choose a point on the machine; i.e., contact patch of a tire, as a visual reference for use when crossing the test line.

6 Bring the machine to top drive speed before reaching the test line. Release the function enable switch or the joystick when your reference point on the machine crosses the test line.

7 Measure the distance between the test line and your machine reference point.

☉ Result: The machine stops within the specified braking distance. No action required.

☒ Result: The machine does not stop within the specified braking distance. Note: The brakes must be able to hold the machine on any slope it is able to climb.

8 Replace the brakes and repeat this procedure beginning with step 1

Maintenance

B-8

Test the Drive Speed - Stowed Position

Swift Equipment requires that this procedure beperformed every 250 hours or quarterly,whichever comes first.

Proper drive functions are essential to safe machine operation. The drive function should respond quickly and smoothly to operator control. Drive performance should also be free of hesitation, jerking and unusual noise over the entire proportionally controlled speed range.

Perform this procedure with the machine on a firm, level surface that is free of obstructions.

1 Create start and finish lines by marking two lines on the ground 12.2 m apart.

2 Turn the key switch to platform control. Turn the ground red Emergency Stop button clockwise to the on position. Pull out the platform red Emergency Stop button to the on position.

3 Lower the platform to the stowed position.

4 Press the drive function select button.

5 Choose a point on the machine; i.e., contact patch of a tire, as a visual reference for use when crossing the start and finish lines.

6 Bring the machine to top drive speed before reaching the start line. Begin timing when your reference point on the machine crosses the start line.

7 Continue at full speed and note the time when your reference point on the machine passes over the finish line. Refer to specifications.

Maintenance

B-10

Test the Slow Drive Speed

Swift Equipment requires that this procedure beperformed every 250 hours or quarterly,whichever comes first.

Proper drive functions are essential to safe machine operation. The drive function should respond quickly and smoothly to operator control. Drive performance should also be free of hesitation, jerking and unusual noise over the entire proportionally controlled speed range.

Perform this procedure with the machine on a firm, level surface that is free of obstructions.

1 Create start and finish lines by marking two lines on the ground 12.2 m apart.

2 Turn the key switch to platform control. Turn the ground red Emergency Stop button clockwise to the on position. Pull out the platform red Emergency Stop button to the on position

3 Lower the platform to the stowed position.

4 Press the slow speed select button.

5 Choose a point on the machine; i.e., contact patch of a tire, as a visual reference for use when crossing the start and finish lines.

6 Bring the machine to top drive speed before reaching the start line. Begin timing when your reference point on the machine crosses the start line.

7 Continue at full speed and note the time when your reference point on the machine passes over the finish line. The time is less than 25 sec.

Maintenance

B-11

Perform Hydraulic Oil Analysis

Swift Equipment requires that this procedure beperformed every 250 hours or quarterly,whichever comes first.

Replacement or testing of the hydraulic oil is essential for good machine performance and service life. Dirty oil may cause the machine to perform poorly and continued use may cause component damage. Extremely dirty conditions may require oil changes to be performed more often.

Before replacing the hydraulic oil, the oil may be tested by an oil distributor for specific levels of contamination to verify that changing the oil is necessary.

If the hydraulic oil is not replaced at the two-year inspection, test the oil quarterly. Replace the oil when it fails the test. See E-1, Test or Replace the Hydraulic Oil.

B-12

Inspect the Hydraulic Tank Cap Venting System

Swift Equipment requires that this procedure be performed quarterly or every 250 hours, whichever comes first. Perform this procedure more often if dusty conditions exist.

A free-breathing hydraulic tank cap is essential for good machine performance and service life. A dirty or clogged cap may cause the machine to perform poorly. Extremely dirty conditions may require that the cap be inspected more often.

1 Remove the breather cap from the hydraulic tank.

2 Check for proper venting.

☉ Result: Air passes through the breather cap.

¤ Result: If air does not pass through the cap, clean or replace the cap. Proceed to step 3.

Note: When checking for positive tank cap venting, air should pass freely through the cap.

3 Using a mild solvent, carefully wash the cap venting system. Dry using low pressure compressed air. Repeat step 2.

4 Install the breather cap onto the hydraulic tank.

Maintenance

B-13

Test the Down Limit Switch and the Level Sensor

Swift Equipment requires that this procedure beperformed every 250 hours or quarterly,whichever comes first.

Maintaining the limit switches is essential to safe operation and good machine performance. Operating the machine with a faulty limit switch could result in reduced machine performance and a potentially unsafe operating condition.

Perform these procedures with the machine on a firm, level surface that is free of obstructions.

Down Limit Switch

1 Remove the platform controls from the platform.

2 Raise the platform until the distance of the two sets of scissors are at least 0.5m.

3 Lift the safety arm, move it to the center of the scissor arm and rotate down to a vertical position

4 Lower the platform until the safety arm rests securely on the link. Keep clear of the safety arm when lowering the platform.

WARNING Crushing hazard. Keep hands clear of the safety arm when lowering the platform.

5 Turn the key switch to the off position.

6 Tag and disconnect the platform control box at the platform.

7 Follow the platform control cable down the scissor stack to the underside of the chassis deck. Tag and disconnect the platform cable from the ECU cable at the 6-pin Deutsch connector under the chassis deck.

8 Securely install the platform control box harness plug into the 6-pin Deutsch connector of the ECU cable.

9 Open the down limit switch cover, tag and disconnect the wires of the down limit switch wire harness.

10 Turn the key switch to platform control.

11 Raise the platform and return the safety arm to the stowed position.

12 Working at the platform controls, press the lift function select button. Lower the platform to the stowed position.

☉ Result: The LED readout screen will show code 18, an alarm sounds and the lift function should operate. The machine is functioning properly.

¤ Result: The LED readout screen does not show code 18, the alarm does not sound and the lift function should not operate. Replace the down limit switch.

13 Press the drive function select button. Attempt to drive the machine.

☉ Result: The LED readout screen will show code 18, an alarm sounds, and the steer and drive functions should not operate. The machine is functioning properly.

¤ Result: The LED readout screen does not show code 18, the alarm does not sound, and the steer and drive functions operate. Replace the down limit switch.

Maintenance

14 Press the lift function select button. Raise the platform approximately 0.3 m.

⊙ Result: The LED readout screen will show code 18 and an alarm sounds. The machine is functioning properly.

¤ Result: The LED readout screen does not show code 18 and the alarm does not sound. Replace the down limit switch.

15 Raise the platform until the pothole guards are deployed.

⊙ Result: The LED readout screen does not show code 18 and the alarm does not sound. The machine is functioning properly.

¤ Result: The LED readout screen shows code 18 and an alarm sounds. Replace the down limit switch.

16 Raise the platform until the distance of the two sets of scissors are at least 0.5m.

17 Lift the safety arm, move it to the center of the scissor arm and rotate down to a vertical position.

18 Lower the platform until the safety arm rests securely on the link. Keep clear of the safety arm when lowering the platform.

WARNING Crushing hazard. Keep hands clear of the safety arm when lowering the platform.

19 Turn the key switch to the off position.

20 Disconnect the platform controls from the ECU cable.

21 Securely install the connector of the ECU cable into the platform control cable.

22 Working at the platform, securely install the connector of the platform controls into the platform control cable.

23 Securely connect the two wires of the down limit switch to wire harness.

24 Close and install the switch cover.

25 Turn the key switch to platform control.

26 Raise the platform and return the safety arm to the stowed position.

27 Lower the platform to the stowed position.

Level sensor

28 Move the machine onto a grade which exceeds the rating of the level sensor. Refer to the serial label on the machine.

29 Press the lift function select button. Standing on the up-hill side of the machine, attempt to raise the platform to approximately 2 m.

⊙ Result: The LED readout screen shows code LL, an alarm sounds, and the machine stops lifting after the pothole guards are deployed. The machine is functioning properly.

¤ Result: The LED readout screen does not show code LL, the alarm does not sound and the machine will continue to lift the platform after the pothole guards are deployed. Adjust or replace the level sensor.

30 Press the drive function select button. Standing on the up-hill side of the machine, attempt to steer and drive the machine.

⊙ Result: The LED readout screen shows code LL, an alarm sounds, and the machine will not steer or drive. The machine is functioning properly.

¤ Result: The LED readout screen does not show code LL, the alarm does not sound and the steer and drive functions operate. Adjust or replace the level sensor.

Maintenance

B-14

Test the Up Limit Switch

Swift Equipment requires that this procedure beperformed every 250 hours or quarterly,whichever comes first.

Maintaining the limit switches is essential to safe operation and good machine performance.

Operating the machine with a faulty limit switch could result in reduced machine performance and a potentially unsafe operating condition.

Perform these procedures with the machine on a firm, level surface that is free of obstructions.

1 Raise the platform until the distance of the two sets of scissors are at least 0.5m.

2 Lift the safety arm, move it to the center of the scissor arm and rotate down to a vertical position.

3 Lower the platform until the safety arm rests securely on the link. Keep clear of the safety arm when lowering the platform.

WARNING Crushing hazard. Keep hands clear of the safety arm when lowering the platform.

4 Open the limited switch house cover from the chassis.

5 While raising the platform from the ground controls, push in the roller of the up-limit switch to activate the limit switch.

☉ Result: The platform stops raising. The machine is functioning properly.

¤ Result: The platform continues to raise. Adjust or replace the up-limit switch.

6 Install the limited switch house cover to chassis.

7 Put the safe arm to home position.

8 Lower the platform to the stowed position.

Maintenance

Checklist C Procedures

C-1

Test the Platform Overload System (if equipped)

Swift Equipment requires that this procedure be performed every 500 hours or six months, whichever comes first or when the machine fails to lift the maximum rated load.

Testing the platform overload system regularly is essential to safe machine operation. Continued use of an improperly operating platform overload system could result in the system not sensing an overloaded platform condition. Machine stability could be compromised resulting in the machine tipping over.

The platform overload system is designed to prevent machine operation in the event the platform is overloaded. Models equipped with the platform overload option are provided with two additional machine control components: the overload pressure sensor and angle sensor.

The overload pressure sensor, which is adjustable and located at the barrel-end of the lift cylinder, is used to determine when the hydraulic lift cylinder requires too much pressure to support the load inside the platform. When this occurs, the overload pressure sensor will send a signal to the ECU, which will not allow the machine to function until the extra weight is removed from the platform.

The angle sensor, located in the inner scissor arm 1, is used to determine the tilt of scissor, then to measure the height of platform.

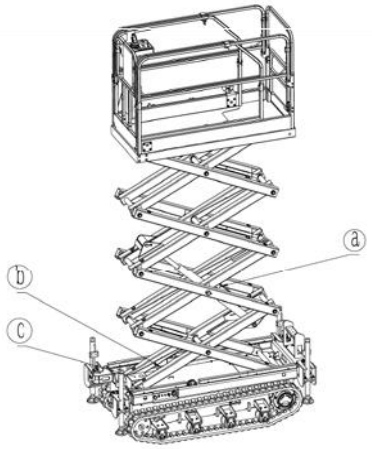

a Overload pressure sensor

b Angle sensor

c Limited switch cover

1 Raise the platform until the distance of the two sets of scissors are at least 0.5m.

2 Lift the safety arm, move it to the center of the scissor arm and rotate down to a vertical position.

3 Lower the platform until the safety arm rests securely on the link. Keep clear of the safety arm when lowering the platform.

WARNING Crushing hazard. Keep hands clear of the safety arm when lowering the platform.

4 Open the limited switch house cover from the chassis.

5 Open the up limited switch cover.

Maintenance

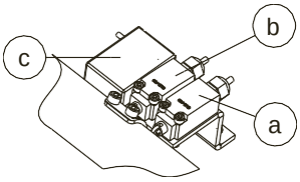

a up limited switch

b down limited switch

c level sensor

6 Tag and disconnect the wires of the up-limit switch wire harness.

7 Securely connect the terminals ofthe two wires of the up-limit switch.

8 Turn the key switch to ground control. Turn the ground red Emergency Stop button clockwise to the on position. Pull out the platform red Emergency Stop button to the on position

9 Raise the platform to release the safe arm.

10 Put the safe arm to home position.

11 Fully raise the platform. Release the toggle switch.

☉ Result: The alarm should sound.

¤ Result: The alarm does not sound. Calibrate the platform overload system.

12 Using the emergency lowering knob, lower the platform to the stowed position.

13 Securely connect the wires of the up-limitswitch.

14 Fully raise the platform. Release the toggle switch.

☉ Result -The alarm should not sound. The system is functioning correctly.

¤ Result: The alarm sounds. The system is not functioning correctly. Troubleshoot the limit switch, limit switch wire harness or limit switch mount bracket or the platform overload system needs to be calibrated.

15 Lower the platform until the distance of the two sets of scissors at least 0.5m.

16 Lift the safety arm, move it to the center of the scissor arm and rotate down to a vertical position.

17 Lower the platform until the safety arm rests securely on the link. Keep clear of the safety arm when lowering the platform.

WARNING Crushing hazard. Keep hands clear of the safety arm when lowering the platform.

18 Install the up limited switch cover.

19 Install the limited switch house cover.

20 Raise the platform to release the safe arm.

21 Put the safe arm to home position.

22 Lower the platform to the stowed position.

Maintenance

C-2

Replace the Hydraulic Tank Breather Cap

Swift Equipment requires that this procedure be performed every 500 hours or semi-annually, whichever comes first.

The hydraulic tank is a vented-type tank. The breather cap has an internal air filter that can become clogged or, over time, can deteriorate. If the breather cap is faulty or improperly installed, impurities can enter the hydraulic system which may cause component damage. Extremely dirty conditions may require that the cap be inspected more often.

1 Remove and discard the hydraulic tank breather cap.

2 Install a new cap onto the tank.

Maintenance

Checklist D Procedures

D-1

Check the Scissor Arm Wear Pads

Swift Equipment requires that this procedure be performed every 1000 hours or annually, whichever comes first.

Maintaining the condition of the scissor arm wear pads is essential to safe machine operation. Continued use of worn-out wear pads may result in component damage and unsafe operating conditions.

Perform this procedure with the platform in the stowed position.

1 Measure the distance between the number one arm cross tube and the chassis deck at the ground controls side of the non-steer end of the machine.

☉ Result: The measurement is X mm or more. Proceed to step 2.

¤ Result: The measurement is less than X mm. Replace both wear pads.

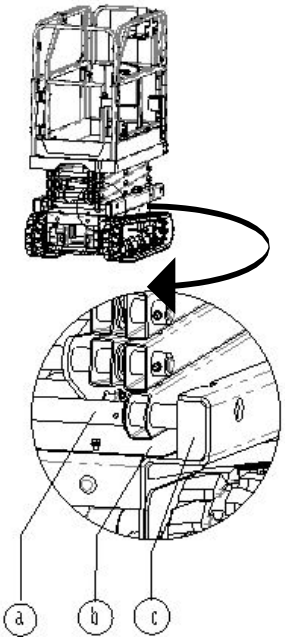

a Wear pad

b Arm cross tube

c Chassis deck

2 Measure the distance between the number one arm cross tube and the chassis deck at the battery pack side of the non-steer end of the machine.

☉ Result: The measurement is X mm or more. Proceed to step 3.

¤ Result: The measurement is less than X mm. Replace both wear pads.

3 Apply a thin layer of dry film lubricant to the area of the chassis where the scissor arm wear pads make contact.

	X
TS06E	65mm

Maintenance

D-2

Replace the Hydraulic Tank Return Filter Element

Swift Equipment requires that this procedure be performed every 1000 hours or annually, whichever comes first.

Replacement of the hydraulic tank return filter is essential for good machine performance and service life. A dirty or clogged filter may cause the machine to perform poorly and continued use may cause component damage. Extremely dirty conditions may require that the filter be replaced more often.

CAUTION Beware of hot oil. Contact with hot oil may cause severe burns.

NOTICE

The hydraulic tank return filter is mounted on the bracket between the function manifold and the hydraulic power unit.

1 Clean the area around the oil filter. Remove the filter with an oil filter wrench.

2 Apply a thin layer of oil to the new oil filter gasket.

3 Install the new filter and tighten it securely by hand.

4 Use a permanent ink marker to write the date and number of hours from the hour meter onto the filter.

5 Turn the key switch to ground control. Turn the ground red Emergency Stop button clockwise to the on position. Pull out the platform red Emergency Stop button to the on position.

6 Activate and hold the platform up toggle switch.

7 Inspect the filter and related components to be sure that there are no leaks.

8 Clean up any oil that may have spilled.

Maintenance

Checklist E Procedure

E-1

Test or Replace the Hydraulic Oil

Swift Equipment requires that this procedure be performed every 2000 hours or every two years, whichever comes first.

Replacement or testing of the hydraulic oil is essential for good machine performance and service life. Dirty oil may cause the machine to perform poorly and continued use may cause component damage. Extremely dirty conditions may require oil changes to be performed more often.

Before replacing the hydraulic oil, the oil may be tested by an oil distributor for specific levels of contamination to verify that changing the oil is necessary.

If the hydraulic oil is not replaced at the two-year inspection, test the oil quarterly. Replace the oil when it fails the test.

Note: Perform this procedure with the platform in the stowed position.

1 Disconnect the battery pack from the machine.

WARNING Electrocution/burn hazard. Contact with electrically charged circuits could result in death or serious injury. Remove all rings, watches and other jewellery.

2 Open the power unit module tray.

3 Remove the oil drain plug at bottom.

4 Drain all the oil into a suitable container.

5 Tag and disconnect the hydraulic tank return line from the hydraulic filter head and remove the line from the tank. Cap the fitting on the filter head.

6 Tag and disconnect the hydraulic pump inlet line and remove the line from the tank. Cap the fitting on the pump.

7 Remove the hydraulic tank retaining fasteners and remove the hydraulic tank from the machine.

Bodily injury hazard.

WARNING Spraying hydraulic oil can penetrate and burn skin. Loosen hydraulic connections very slowly to allow the oil pressure to dissipate gradually. Do not allow oil to squirt or spray.

8 Clean up any oil that may have spilled. Properly discard the used oil.

9 Clean the inside of the hydraulic tank using a mild solvent. Allow the tank to dry completely.

10 Install a new filter onto the tank.

11 Tighten the drain plug. Torque to specification.

12 Install the hydraulic tank and install and tighten the hydraulic tank retaining fasteners. Torque to specification.

13 Install the hydraulic pump inlet line into the tank. Install the fitting onto the pump and torque.

14 Install the hydraulic pump return line into the tank. Install the fitting onto the hydraulic filter head and torque.

Maintenance

15 Fill the tank with hydraulic oil until the fluid is full in the hydraulic tank. Do not overfill.

16 Activate the pump to fill the hydraulic system with oil and bleed the system of air.

WARNING Component damage hazard. The pump can be damaged if operated without oil. Be careful not to empty the hydraulic tank while in the process of filling the hydraulic system. Do not allow the pump to cavitate.

Hydraulic Schematic Diagram

TS06E

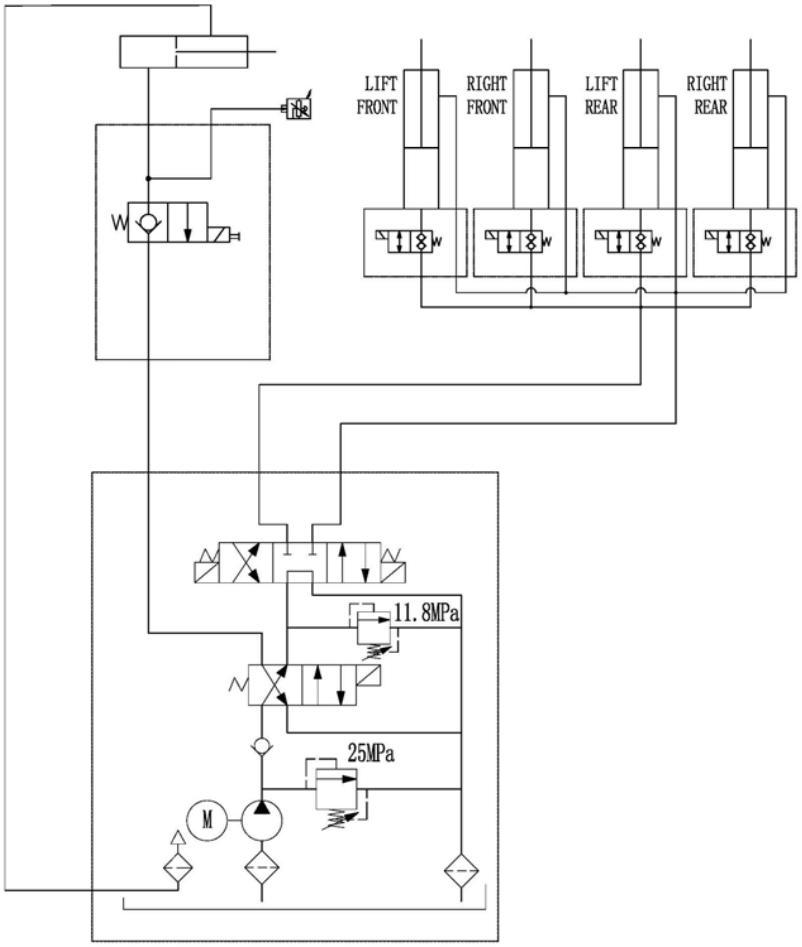

Electrical Schematic Diagram

TS06E

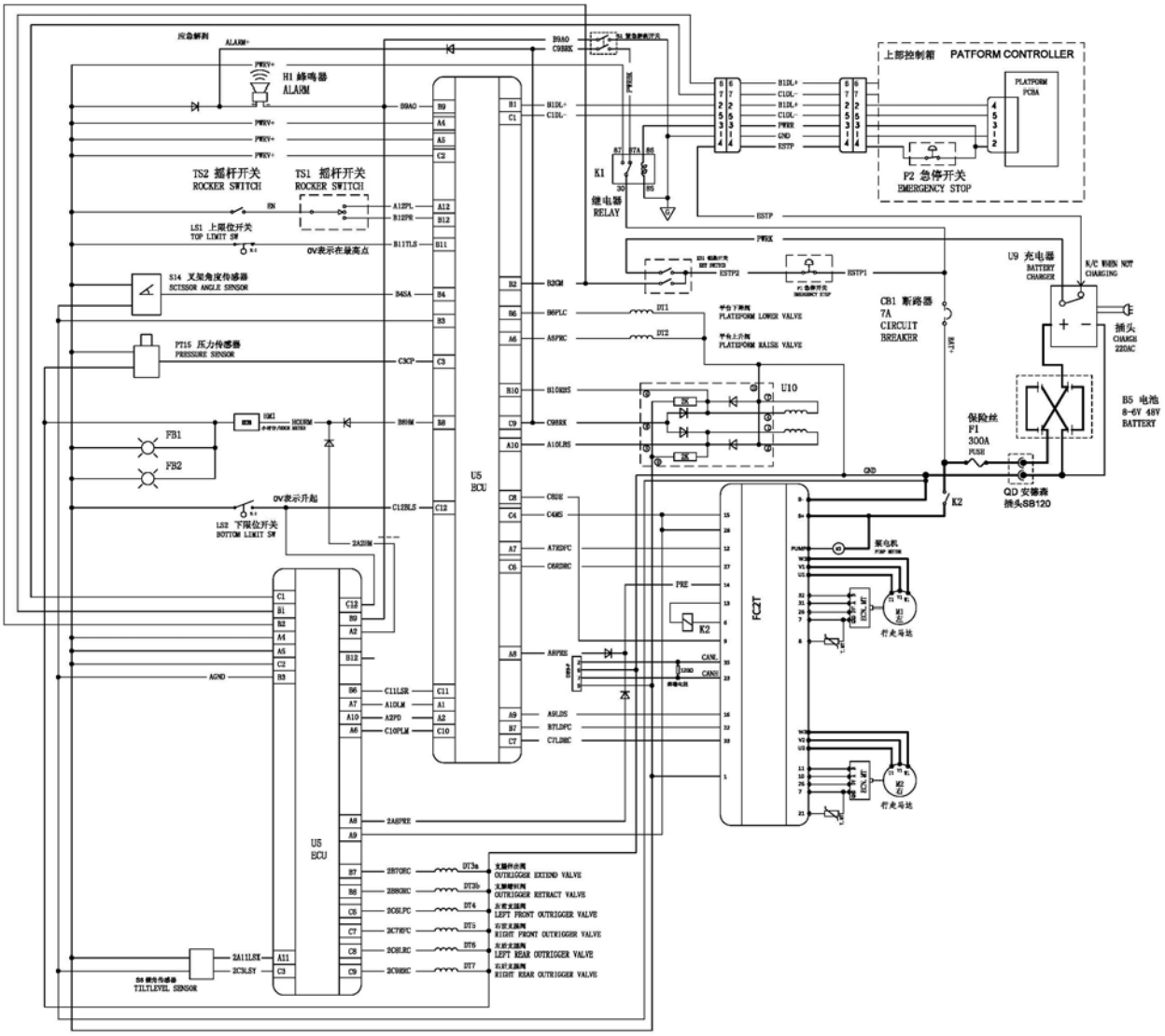

Inspection and Repair Log

Date	Comments