An Oshkosh Corporation Company

Operation and Safety Manual

Original Instructions - Keep this manual with the machine at all times.

Boom Lift Models
340AJ
S/N 0300200802 to 0300272222

ANSI **AS/NZS**

3121258
December 9, 2019 - Rev K

⚠ WARNING

Operating, servicing and maintaining this vehicle or equipment can expose you to chemicals including engine exhaust, carbon monoxide, phthalates, and lead, which are known to the State of California to cause cancer and birth defects or other reproductive harm. To minimize exposure, avoid breathing exhaust, do not idle the engine except as necessary, service your vehicle or equipment in a well-ventilated area and wear gloves or wash your hands frequently when servicing. For more information go to www.P65Warnings.ca.gov.

FOREWORD

This manual is a very important tool! Keep it with the machine at all times.

The purpose of this manual is to provide owners, users, operators, lessors, and lessees with the precautions and operating procedures essential for the safe and proper machine operation for its intended purpose.

Due to continuous product improvements, JLG Industries, Inc. reserves the right to make specification changes without prior notification. Contact JLG Industries, Inc. for updated information.

SAFETY ALERT SYMBOLS AND SAFETY SIGNAL WORDS

This is the Safety Alert Symbol. It is used to alert you to the potential personal injury hazards. Obey all safety messages that follow this symbol to avoid possible injury or death

DANGER

INDICATES AN IMMINENTLY HAZARDOUS SITUATION. IF NOT AVOIDED, WILL RESULT IN SERIOUS INJURY OR DEATH. THIS DECAL WILL HAVE A RED BACKGROUND.

WARNING

INDICATES A POTENTIALLY HAZARDOUS SITUATION. IF NOT AVOIDED, COULD RESULT IN SERIOUS INJURY OR DEATH. THIS DECAL WILL HAVE AN ORANGE BACKGROUND.

CAUTION

INDICATES A POTENTIALLY HAZARDOUS SITUATION. IF NOT AVOIDED, MAY RESULT IN MINOR OR MODERATE INJURY. IT MAY ALSO ALERT AGAINST UNSAFE PRACTICES. THIS DECAL WILL HAVE A YELLOW BACKGROUND.

NOTICE

INDICATES INFORMATION OR A COMPANY POLICY THAT RELATES DIRECTLY OR INDIRECTLY TO THE SAFETY OF PERSONNEL OR PROTECTION OF PROPERTY.

⚠ WARNING

THIS PRODUCT MUST COMPLY WITH ALL SAFETY RELATED BULLETINS. CONTACT JLG INDUSTRIES, INC. OR THE LOCAL AUTHORIZED JLG REPRESENTATIVE FOR INFORMATION REGARDING SAFETY-RELATED BULLETINS WHICH MAY HAVE BEEN ISSUED FOR THIS PRODUCT.

NOTICE

JLG INDUSTRIES, INC. SENDS SAFETY RELATED BULLETINS TO THE OWNER OF RECORD OF THIS MACHINE. CONTACT JLG INDUSTRIES, INC. TO ENSURE THAT THE CURRENT OWNER RECORDS ARE UPDATED AND ACCURATE.

NOTICE

JLG INDUSTRIES, INC. MUST BE NOTIFIED IMMEDIATELY IN ALL INSTANCES WHERE JLG PRODUCTS HAVE BEEN INVOLVED IN AN ACCIDENT INVOLVING BODILY INJURY OR DEATH OF PERSONNEL OR WHEN SUBSTANTIAL DAMAGE HAS OCCURRED TO PERSONAL PROPERTY OR THE JLG PRODUCT.

For:

- Accident Reporting
- Product Safety Publications
- Current Owner Updates
- Questions Regarding Product Safety
- Standards and Regulations Compliance Information
- Questions Regarding Special Product Applications
- Questions Regarding Product Modifications

Contact:

Product Safety and Reliability Department
JLG Industries, Inc.
13224 Fountainhead Plaza
Hagerstown, MD 21742
USA

or Your Local JLG Office
(See addresses on inside of manual cover)

In USA:

Toll Free: 877-JLG-SAFE (877-554-7233)

Outside USA:

Phone: 240-420-2661
Fax: 301-745-3713
E-mail: ProductSafety@JLG.com

REVISION LOG

Original Issue	A - June 17, 2010
Revised	B - December 20, 2010
Revised	C - March 17, 2011
Revised	D - May 16, 2012
Revised	E - January 2, 2013
Revised	F - January 5, 2015
Revised	G - September 25, 2017
Revised	H - June 29, 2018 - Revised Covers, Prop 65
Revised	I - November 5, 2018
Revised	J - January 29, 2019
Revised	K - December 9, 2019

SECTION - PARAGRAPH, SUBJECT PAGE

SECTION - 1 - SAFETY PRECAUTIONS

1.1 GENERAL 1-1
1.2 PRE-OPERATION 1-1
Operator Training and Knowledge 1-1
Workplace Inspection. 1-2
Machine Inspection. 1-3
1.3 OPERATION. 1-3
General 1-3
Trip and Fall Hazards. 1-4
Electrocution Hazards 1-5
Tipping Hazards 1-7
Crushing and Collision Hazards 1-10
1.4 TOWING, LIFTING, AND HAULING. 1-11
1.5 MAINTENANCE. 1-11
Maintenance Hazards. 1-11
Battery Hazards. 1-13

SECTION - 2 - USER RESPONSIBILITIES, MACHINE PREPARATION, AND INSPECTION

2.1 PERSONNEL TRAINING 2-1
Operator Training 2-1
Training Supervision. 2-1
Operator Responsibility. 2-1
2.2 PREPARATION, INSPECTION, AND MAINTENANCE 2-2
Pre-Start Inspection. 2-5
Daily Walk-Around Inspection. 2-6

SECTION - PARAGRAPH, SUBJECT PAGE

Function Check. 2-8
SkyGuard Function Test. 2-9
2.3 OSCILLATING AXLE LOCKOUT TEST (IF EQUIPPED). . . . 2-10

SECTION - 3 - MACHINE CONTROLS AND INDICATORS

3.1 GENERAL 3-1
3.2 CONTROLS AND INDICATORS 3-1
Ground Control Station 3-2
Ground Control Indicator Panel 3-7
Platform Station 3-9
Platform Control Indicator Panel 3-13

SECTION - 4 - MACHINE OPERATION

4.1 DESCRIPTION 4-1
4.2 BOOM OPERATING CHARACTERISTICS AND LIMITATIONS. 4-2
Capacities 4-2
Stability 4-2
4.3 ENGINE OPERATION. 4-2
Starting Procedure 4-2
Shutdown Procedure 4-3
Fuel Reserve / Shut-Off System (Gas or Diesel Engines . Only) 4-3
4.4 TRAVELING (DRIVING) 4-6
Traveling Forward and Reverse 4-8

SECTION - PARAGRAPH, SUBJECT — PAGE

4.5 STEERING 4-8
4.6 PLATFORM 4-8
Platform Level Adjustment 4-8
Platform Rotation 4-8
4.7 BOOM 4-9
Swinging the Boom 4-9
Raising and Lowering the Tower Boom 4-10
Raising and Lowering the Main Boom 4-10
Telescoping the Main Boom 4-10
4.8 FUNCTION SPEED CONTROL 4-10
4.9 MACHINE SAFETY SYSTEM OVERRIDE (MSSO) (CE ONLY) 4-10
4.10 SKYGUARD OPERATION 4-11
SkyGuard 4-11
SkyGuard - SkyLine 4-11
SkyGuard - SkyEye 4-12
SkyGuard Function Table 4-12
4.11 DUAL FUEL SYSTEM (GAS ENGINE ONLY) 4-13
Changing From Gasoline to LP Gas 4-13
Changing From LP Gas to Gasoline 4-13
4.12 SHUT DOWN AND PARK 4-13
Shut Down and Park 4-13
Storage Position 4-14
4.13 LIFTING AND TIE DOWN 4-17
Lifting 4-17
Tie Down 4-17

SECTION - PARAGRAPH, SUBJECT — PAGE

SECTION - 5 - EMERGENCY PROCEDURES

5.1 GENERAL 5-1
5.2 INCIDENT NOTIFICATION 5-1
5.3 EMERGENCY OPERATION 5-1
Operator Unable to Control Machine 5-1
Platform or Boom Caught Overhead 5-2
5.4 AUXILIARY DESCENT SYSTEM 5-2
5.5 MANUAL SWING OVERRIDE 5-3
5.6 EMERGENCY TOWING PROCEDURES 5-5
5.7 MACHINE SAFETY SYSTEM OVERRIDE (MSSO) (CE ONLY) 5-5

SECTION - 6 - GENERAL SPECIFICATIONS & OPERATOR MAINTENANCE

6.1 INTRODUCTION 6-1
6.2 OPERATING SPECIFICATIONS AND PERFORMANCE DATA 6-1
Operating Specifications 6-1
Dimensional Data 6-2
Capacities 6-2
Tires 6-3
Engine Data 6-3
Hydraulic Oil 6-4
Major Component Weights 6-9

SECTION - PARAGRAPH, SUBJECT **PAGE**

6.3 OPERATOR MAINTENANCE 6-13
6.4 TIRES & WHEELS. 6-18
Tire Replacement 6-18
Wheel and Tire Replacement 6-19
Wheel Installation 6-19
6.5 SUPPLEMENTAL INFORMATION 6-20

SECTION - 7 - INSPECTION AND REPAIR LOG

SECTION - PARAGRAPH, SUBJECT **PAGE**

SECTION - PARAGRAPH, SUBJECT	PAGE	SECTION - PARAGRAPH, SUBJECT	PAGE

This Page Left Blank Intentionally

FIGURE NUMBER - TITLE		PAGE
2-1.	Basic Nomenclature	2-4
2-2.	Daily Walk-Around Inspection - Sheet 1 of 3	2-6
3-1.	Ground Control Station	3-3
3-2.	Ground Control Station with Machine Safety System Override (MSSO) (CE Only)	3-4
3-3.	Ground Control Indicator Panel	3-8
3-4.	Platform Control Console	3-10
3-5.	Platform Control Indicator Panel	3-14
4-1.	Position of Least Forward Stability	4-4
4-2.	Position of Least Backward Stability	4-5
4-3.	Grade and Side Slopes	4-7
4-4.	Stowed Position	4-15
4-5.	Storage Position	4-16
4-6.	Lifting and Tie Down Chart	4-18
4-7.	Decal Location Sheet 1 of 10	4-19
4-8.	Decal Location Sheet 2 of 10	4-20
4-9.	Decal Location Sheet 3 of 10	4-21
4-10.	Decal Location Sheet 4 of 10	4-22
4-11.	Decal Location Sheet 5 of 10	4-23
4-12.	Decal Location Sheet 6 of 10	4-24
4-13.	Decal Location Sheet 7 of 10	4-25
4-14.	Decal Location Sheet 8 of 10	4-26
4-15.	Decal Location Sheet 9 of 10	4-27
4-16.	Decal Location Sheet 10 of 10	4-28
5-1.	Auxiliary Descent Decal and Hand Pump	5-4
6-1.	Oil Sampling Port	6-6
6-2.	Hydraulic Oil Operation Chart - Sheet 1 of 2	6-7
6-3.	Hydraulic Oil Operation Chart - Sheet 2 of 2	6-8
6-4.	Engine Oil Operation Chart - GM	6-10
6-5.	Engine Oil Operation Chart - Kubota	6-11
6-6.	Operator Maintenance and Lubrication Diagram	6-12

FIGURE NUMBER - TITLE **PAGE** **FIGURE NUMBER - TITLE** **PAGE**

This Page Left Blank Intentionally

TABLE NUMBER - TITLE		PAGE
1-1	Minimum Approach Distances (M.A.D.)	1-6
1-2	Beaufort Scale (For Reference Only)	1-9
2-1	Inspection and Maintenance Table	2-3
6-1	Operating Specifications	6-1
6-2	Dimensional Data	6-2
6-3	Capacities	6-2
6-4	Tires	6-3
6-5	Kubota D1105-E3	6-3
6-6	GM 0.97L	6-4
6-7	Hydraulic Oil	6-4
6-8	Critical Stability Weights	6-9
6-9	Lubrication Specifications	6-13
6-10	Wheel Torque Chart	6-19
7-1	Inspection and Repair Log	7-1

TABLE NUMBER - TITLE	PAGE

TABLE NUMBER - TITLE **PAGE** **TABLE NUMBER - TITLE** **PAGE**

This Page Left Blank Intentionally

SECTION 1. SAFETY PRECAUTIONS

1.1 GENERAL

This section outlines the necessary precautions for proper and safe machine usage and maintenance. It is mandatory that a daily routine is established based on the content of this manual to promote proper machine usage. A maintenance program, using the information provided in this manual and the Service and Maintenance Manual, must also be established by a qualified person and must be followed to ensure that the machine is safe to operate.

The owner/user/operator/lessor/lessee of the machine must not accept operating responsibility until this manual has been read, training is accomplished, and operation of the machine has been completed under the supervision of an experienced and qualified operator.

This section contains the responsibilities of the owner, user, operator, lessor, and lessee concerning safety, training, inspection, maintenance, application, and operation. If there are any questions with regard to safety, training, inspection, maintenance, application, and operation, please contact JLG Industries, Inc. ("JLG").

⚠ WARNING

FAILURE TO COMPLY WITH THE SAFETY PRECAUTIONS LISTED IN THIS MANUAL COULD RESULT IN MACHINE DAMAGE, PROPERTY DAMAGE, PERSONAL INJURY OR DEATH.

1.2 PRE-OPERATION

Operator Training and Knowledge

- The Operation and Safety Manual must be read and understood in its entirety before operating the machine. For clarification, questions, or additional information regarding any portions of this manual, contact JLG Industries, Inc.

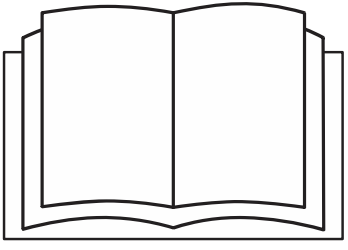

- An operator must not accept operating responsibilities until adequate training has been given by competent and authorized persons.
- Allow only those authorized and qualified personnel to operate the machine who have demonstrated that they understand the safe and proper operation and maintenance of the unit.
- Read, understand, and obey all DANGERS, WARNINGS, CAUTIONS, and operating instructions on the machine and in this manual.
- Ensure that the machine is to be used in a manner which is within the scope of its intended application as determined by JLG.
- All operating personnel must be familiar with the emergency controls and emergency operation of the machine as specified in this manual.
- Read, understand, and obey all applicable employer, local, and governmental regulations as they pertain to your utilization and application of the machine.

Workplace Inspection

- Precautions to avoid all hazards in the work area must be taken by the user before and during operation of the machine.
- Do not operate or raise the platform from a position on trucks, trailers, railway cars, floating vessels, scaffolds or other equipment unless the application is approved in writing by JLG.
- Before operation, check work area for overhead hazards such as electric lines, bridge cranes, and other potential overhead obstructions.
- Check operating surfaces for holes, bumps, drop-offs, obstructions, debris, concealed holes, and other potential hazards.
- Check the work area for hazardous locations. Do not operate the machine in hazardous environments unless approved for that purpose by JLG.
- Ensure that the ground conditions are adequate to support the maximum tire load indicated on the tire load decals located on the chassis adjacent to each wheel. Do not travel on unsupported surfaces.

Machine Inspection

- Do not operate this machine until the inspections and functional checks as specified in Section 2 of this manual have been performed.
- Do not operate this machine until it has been serviced and maintained according to the maintenance and inspection requirements as specified in the machine's Service and Maintenance Manual.
- Ensure all safety devices are operating properly. Modification of these devices is a safety violation.

⚠ WARNING

MODIFICATION OR ALTERATION OF AN AERIAL WORK PLATFORM SHALL BE MADE ONLY WITH PRIOR WRITTEN PERMISSION FROM THE MANUFACTURER.

- Do not operate any machine on which the safety or instruction placards or decals are missing or illegible.
- Check the machine for modifications to original components. Ensure that any modifications have been approved by JLG.
- Avoid accumulation of debris on platform floor. Keep mud, oil, grease, and other slippery substances from footwear and platform floor.

1.3 OPERATION

General

- Machine operation requires your full attention. Bring the machine to a full stop before using any device, i.e. cell phones, two-way radios, etc. that will distract your attention from safely operating the machine.
- Do not use the machine for any purpose other than positioning personnel, their tools, and equipment.
- Before operation, the user must be familiar with the machine capabilities and operating characteristics of all functions.
- Never operate a malfunctioning machine. If a malfunction occurs, shut down the machine. Remove the unit from service and notify the proper authorities.
- Do not remove, modify, or disable any safety devices.
- Never slam a control switch or lever through neutral to an opposite direction. Always return switch to neutral and stop before moving the switch to the next function. Operate controls with slow and even pressure.
- Do not allow personnel to tamper with or operate the machine from the ground with personnel in the platform, except in an emergency.

- Do not carry materials directly on platform railing unless approved by JLG.
- When two or more persons are in the platform, the operator shall be responsible for all machine operations.
- Always ensure that power tools are properly stowed and never left hanging by their cord from the platform work area.
- When driving, always position boom over rear axle in line with the direction of travel. Remember, if boom is over the front axle, steer and drive functions will be reversed.
- Do not assist a stuck or disabled machine by pushing or pulling except by pulling at the chassis tie-down lugs.
- Fully lower platform and shut off all power before leaving machine.
- Remove all rings, watches, and jewelry when operating machine. Do not wear loose fitting clothing or long hair unrestrained which may become caught or entangled in equipment.
- Persons under the influence of drugs or alcohol or who are subject to seizures, dizziness or loss of physical control must not operate this machine.
- Hydraulic cylinders are subject to thermal expansion and contraction. This may result in changes to the boom and/or platform position while the machine is stationary. Factors affecting thermal movement can include the length of time the machine will remain stationary, hydraulic oil temperature, ambient air temperature, and boom and platform position.

Trip and Fall Hazards

- During operation, occupants in the platform must wear a full body harness with a lanyard attached to an authorized lanyard anchorage point. Attach only one (1) lanyard per lanyard anchorage point..

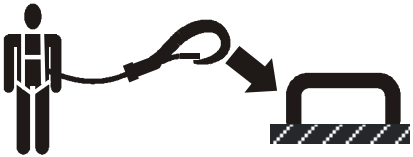

- Enter and exit only through gate area. Use extreme caution when entering or leaving platform. Ensure that the platform assembly is fully lowered. Face the machine when entering or leaving the platform. Always maintain “three point contact” with the machine, using two hands and one foot or two feet and one hand at all times during entry and exit.

- Before operating the machine, make sure all gates are closed and fastened in their proper position.

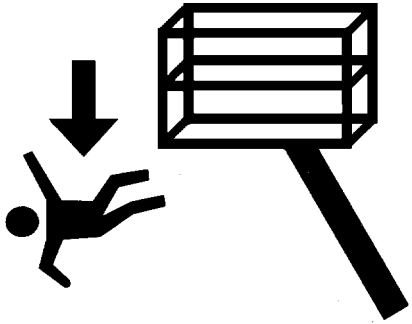

- Keep both feet firmly positioned on the platform floor at all times. Never position ladders, boxes, steps, planks, or similar items on unit to provide additional reach for any purpose.
- Keep oil, mud, and slippery substances cleaned from footwear and the platform floor.

Electrocution Hazards

- This machine is not insulated and does not provide protection from contact or proximity to electrical current.

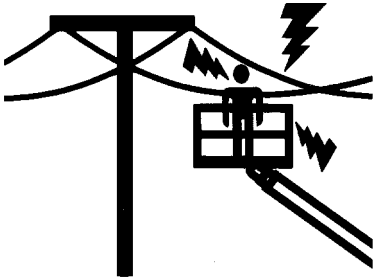

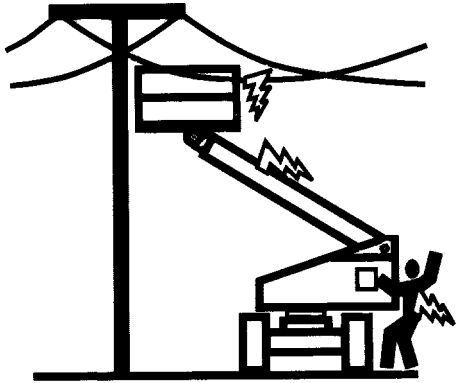

- Maintain distance from electrical lines, apparatus, or any energized (exposed or insulated) parts according to the Minimum Approach Distance (MAD) as shown in Table 1-1.
- Allow for machine movement and electrical line swaying.

Table 1-1. Minimum Approach Distances (M.A.D.)

Voltage Range (Phase to Phase)	MINIMUM APPROACH DISTANCE in Feet (Meters)
0 to 50 KV	10 (3)
Over 50KV to 200 KV	15 (5)
Over 200 KV to 350 KV	20 (6)
Over 350 KV to 500 KV	25 (8)
Over 500 KV to 750 KV	35 (11)
Over 750 KV to 1000 KV	45 (14)

NOTE: ***This requirement shall apply except where employer, local or governmental regulations are more stringent.***

- Maintain a clearance of at least 10 ft. (3m) between any part of the machine and its occupants, their tools, and their equipment from any electrical line or apparatus carrying up to 50,000 volts. One foot additional clearance is required for every additional 30,000 volts or less.

- The minimum approach distance may be reduced if insulating barriers are installed to prevent contact, and the barriers are rated for the voltage of the line being guarded. These barriers shall not be part of (or attached to) the machine. The minimum approach distance shall be reduced to a distance within the designed working dimensions of the insulating barrier. This determination shall be made by a qualified person in accordance with the employer, local, or governmental requirements for work practices near energized equipment.

⚠ DANGER

DO NOT MANEUVER MACHINE OR PERSONNEL INSIDE PROHIBITED ZONE (MAD). ASSUME ALL ELECTRICAL PARTS AND WIRING ARE ENERGIZED UNLESS KNOWN OTHERWISE.

Tipping Hazards

- The user must be familiar with the surface before driving. Do not exceed the allowable sideslope and grade while driving.

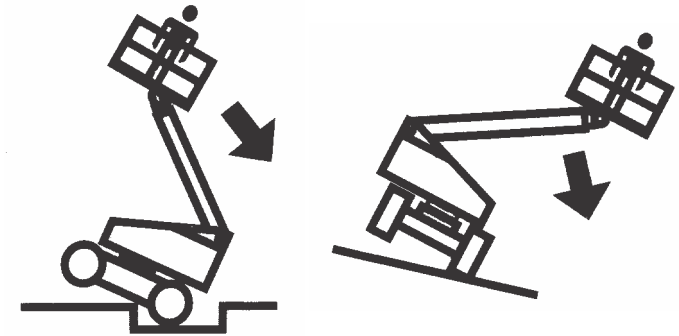

- Do not elevate platform or drive with platform elevated while on or near a sloping, uneven, or soft surface. Ensure machine is positioned on a firm, level and smooth surface before elevating platform or driving with the platform in the elevated position.
- Before driving on floors, bridges, trucks, and other surfaces, check allowable capacity of the surfaces.

- Never exceed the maximum work load as specified on the platform. Keep all loads within the confines of the platform, unless authorized by JLG.
- Keep the chassis of the machine a minimum of 2 ft. (0.6m) from holes, bumps, drop-offs, obstructions, debris, concealed holes, and other potential hazards at the ground level.
- Do not push or pull any object with the boom.
- Never attempt to use the machine as a crane. Do not tie-off machine to any adjacent structure. Never attach wire, cable, or any similar items to platform.
- Do not operate the machine when wind conditions exceed 28 mph (12.5 m/s). Refer to Table 1-2, Beaufort Scale (For Reference Only).
- Do not increase the surface area of the platform or the load. Increase of the area exposed to the wind will decrease stability.
- Do not increase the platform size with unauthorized deck extensions or attachments.
- If boom assembly or platform is in a position that one or more wheels are off the ground, all persons must be removed before attempting to stabilize the machine. Use cranes, forklift trucks, or other appropriate equipment to stabilize machine.

NOTICE

DO NOT OPERATE THE MACHINE WHEN WIND CONDITIONS EXCEED 28 MPH (12.5 M/S).

Table 1-2. Beaufort Scale (For Reference Only)

Beaufort Number	Wind Speed		Description	Land Conditions
	mph	m/s		
0	0	0-0.2	Calm	Calm. Smoke rises vertically
1	1-3	0.3-1.5	Light air	Wind motion visible in smoke
2	4-7	1.6-3.3	Light breeze	Wind felt on exposed skin. Leaves rustle
3	8-12	3.4-5.4	Gentle breeze	Leaves and smaller twigs in constant motion
4	13-18	5.5-7.9	Moderate breeze	Dust and loose paper raised. Small branches begin to move.
5	19-24	8.0-10.7	Fresh breeze	Smaller trees sway.
6	25-31	10.8-13.8	Strong breeze	Large branches in motion. Flags waving near horizontal. Umbrella use becomes difficult.
7	32-38	13.9-17.1	Near Gale/Moderate Gale	Whole trees in motion. Effort needed to walk against the wind.
8	39-46	17.2-20.7	Fresh Gale	Twigs broken from trees. Cars veer on road.
9	47-54	20.8-24.4	Strong Gale	Light structure damage.

Crushing and Collision Hazards

- Approved head gear must be worn by all operating and ground personnel.
- Check work area for clearances overhead, on sides, and bottom of platform when lifting or lowering platform, and driving.

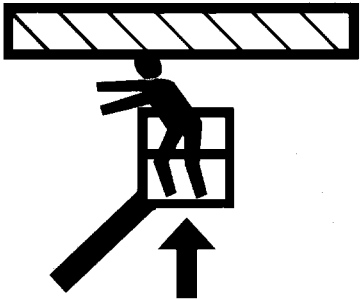

- During operation, keep all body parts inside platform railing.
- Use the boom functions, not the drive function, to position the platform close to obstacles.
- Always post a lookout when driving in areas where vision is obstructed.
- Keep non-operating personnel at least 6 ft. (1.8m) away from machine during all driving and swing operations.
- Under all travel conditions, the operator must limit travel speed according to conditions of ground surface, congestion, visibility, slope, location of personnel, and other factors which may cause collision or injury to personnel.
- Be aware of stopping distances in all drive speeds. When driving in high speed, switch to low speed before stopping. Travel grades in low speed only.
- Do not use high speed drive in restricted or close quarters or when driving in reverse.
- Exercise extreme caution at all times to prevent obstacles from striking or interfering with operating controls and persons in the platform.
- Be sure that operators of other overhead and floor level machines are aware of the aerial work platform's presence. Disconnect power to overhead cranes.
- Warn personnel not to work, stand, or walk under a raised boom or platform. Position barricades on floor if necessary.

1.4 TOWING, LIFTING, AND HAULING

- Never allow personnel in platform while towing, lifting, or hauling.
- This machine should not be towed, except in the event of emergency, malfunction, power failure, or loading/unloading. Refer to the Emergency Procedures section of this manual for emergency towing procedures.
- Ensure boom is in the stowed position and the turntable locked prior to towing, lifting or hauling. The platform must be completely empty of tools.
- When lifting machine, lift only at designated areas of the machine. Lift the unit with equipment of adequate capacity.
- Refer to the Machine Operation section of this manual for lifting information.

1.5 MAINTENANCE

This sub-section contains general safety precautions which must be observed during maintenance of this machine. Additional precautions to be observed during machine maintenance are inserted at the appropriate points in this manual and in the Service and Maintenance Manual. It is of utmost importance that maintenance personnel pay strict attention to these precautions to avoid possible injury to personnel or damage to the machine or property. A maintenance program must be established by a qualified person and must be followed to ensure that the machine is safe.

Maintenance Hazards

- Shut off power to all controls and ensure that all moving parts are secured from inadvertent motion prior to performing any adjustments or repairs.
- Never work under an elevated platform until it has been fully lowered to the full down position, if possible, or otherwise supported and restrained from movement with appropriate safety props, blocking, or overhead supports.
- DO NOT attempt to repair or tighten any hydraulic hoses or fittings while the machine is powered on or when the hydraulic system is under pressure.
- Always relieve hydraulic pressure from all hydraulic circuits before loosening or removing hydraulic components.

- DO NOT use your hand to check for leaks. Use a piece of cardboard or paper to search for leaks. Wear gloves to help protect hands from spraying fluid.

- Ensure replacement parts or components are identical or equivalent to original parts or components.
- Never attempt to move heavy parts without the aid of a mechanical device. Do not allow heavy objects to rest in an unstable position. Ensure adequate support is provided when raising components of the machine.
- Do not use machine as a ground for welding.
- When performing welding or metal cutting operations, precautions must be taken to protect the chassis from direct exposure to weld and metal cutting spatter.
- Do not refuel the machine with the engine running.
- Use only approved non-flammable cleaning solvents.
- Do not replace items critical to stability, such as batteries or solid tires, with items of different weight or specification. Do not modify unit in any way to affect stability.
- Refer to the Service and Maintenance Manual for the weights of critical stability items.

⚠ WARNING

MODIFICATION OR ALTERATION OF AN AERIAL WORK PLATFORM SHALL BE MADE ONLY WITH PRIOR WRITTEN PERMISSION FROM THE MANUFACTURER.

Battery Hazards

- Always disconnect batteries when servicing electrical components or when performing welding on the machine.
- Do not allow smoking, open flame, or sparks near battery during charging or servicing.
- Do not contact tools or other metal objects across the battery terminals.
- Always wear hand, eye, and face protection when servicing batteries. Ensure that battery acid does not come in contact with skin or clothing.

CAUTION

BATTERY FLUID IS HIGHLY CORROSIVE. AVOID CONTACT WITH SKIN AND CLOTHING AT ALL TIMES. IMMEDIATELY RINSE ANY CONTACTED AREA WITH CLEAN WATER AND SEEK MEDICAL ATTENTION.

- Charge batteries only in a well ventilated area.
- Avoid overfilling the battery fluid level. Add distilled water to batteries only after the batteries are fully charged.

NOTES:

SECTION 2. USER RESPONSIBILITIES, MACHINE PREPARATION, AND INSPECTION

2.1 PERSONNEL TRAINING

The aerial platform is a personnel handling device; so it is necessary that it be operated and maintained only by trained personnel.

Persons under the influence of drugs or alcohol or who are subject to seizures, dizziness or loss of physical control must not operate this machine.

Operator Training

Operator training must cover:

1. Use and limitations of the controls in the platform and at the ground, emergency controls and safety systems.
2. Control labels, instructions, and warnings on the machine.
3. Rules of the employer and government regulations.
4. Use of approved fall protection device.
5. Enough knowledge of the mechanical operation of the machine to recognize a malfunction or potential malfunction.
6. The safest means to operate the machine where overhead obstructions, other moving equipment, and obstacles, depressions, holes, or drop-offs exist.
7. Means to avoid the hazards of unprotected electrical conductors.
8. Specific job requirements or machine application.

Training Supervision

Training must be done under the supervision of a qualified person in an open area free of obstructions until the trainee has developed the ability to safely control and operate the machine.

Operator Responsibility

The operator must be instructed that he/she has the responsibility and authority to shut down the machine in case of a malfunction or other unsafe condition of either the machine or the job site.

2.2 PREPARATION, INSPECTION, AND MAINTENANCE

The following table covers the periodic machine inspections and maintenance required by JLG Industries, Inc. Consult local regulations for further requirements for aerial work platforms. The frequency of inspections and maintenance must be increased as necessary when the machine is used in a harsh or hostile environment, if the machine is used with increased frequency, or if the machine is used in a severe manner.

NOTICE

JLG INDUSTRIES, INC. RECOGNIZES A FACTORY TRAINED SERVICE TECHNICIAN AS A PERSON WHO HAS SUCCESSFULLY COMPLETED THE JLG SERVICE TRAINING SCHOOL FOR THE SPECIFIC JLG PRODUCT MODEL.

Table 2-1. Inspection and Maintenance Table

Type	Frequency	Primary Responsibility	Service Qualification	Reference
Pre-Start Inspection	Before using each day; or whenever there's an Operator change.	User or Operator	User or Operator	Operator and Safety Manual
Pre-Delivery Inspection (See Note)	Before each sale, lease, or rental delivery.	Owner, Dealer, or User	Qualified JLG Mechanic	Service and Maintenance Manual and applicable JLG inspection form
Frequent Inspection (See Note)	In service for 3 months or 150 hours, whichever comes first; or Out of service for a period of more than 3 months; or Purchased used.	Owner, Dealer, or User	Qualified JLG Mechanic	Service and Maintenance Manual and applicable JLG inspection form
Annual Machine Inspection (See Note)	Annually, no later than 13 months from the date of prior inspection.	Owner, Dealer, or User	Factory Trained Service Technician (Recommended)	Service and Maintenance Manual and applicable JLG inspection form
Preventative Maintenance	At intervals as specified in the Service and Maintenance Manual.	Owner, Dealer, or User	Qualified JLG Mechanic	Service and Maintenance Manual
NOTE: *Inspection forms are available from JLG. Use the Service and Maintenance Manual to perform inspections.*				

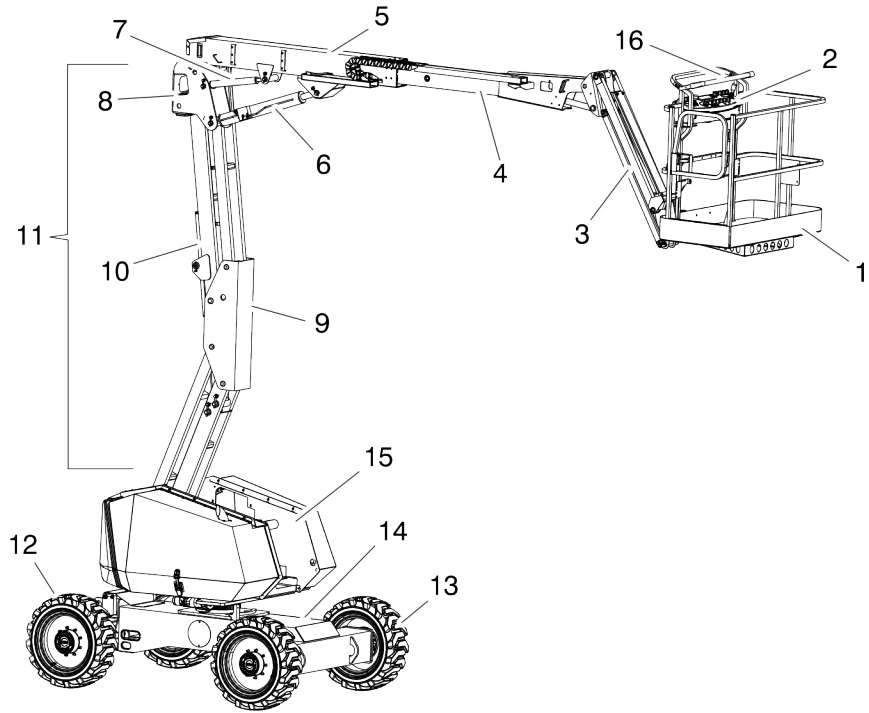

1. Platform
2. Platform Console
3. Jib
4. Fly Boom Section
5. Base Boom Section
6. Main Lift Cylinder
7. Master Cylinder
8. Upper Upright
9. Lower Upright
10. Tower Lift Cylinder
11. Tower Boom
12. Front Drive/Steer Wheels
13. Rear Drive Wheels
14. Frame
15. Turntable
16. SkyGuard (If Equipped)

Figure 2-1. Basic Nomenclature

Pre-Start Inspection

The Pre-Start Inspection should include each of the following:

1. **Cleanliness –** Check all surfaces for leakage (oil, fuel, or battery fluid) or foreign objects. Report any leakage to the proper maintenance personnel.
2. **Structure** - Inspect the machine structure for dents, damage, weld or parent metal cracks or other discrepancies.

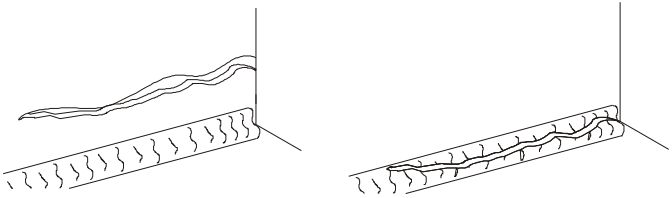

3. **Decals and Placards** – Check all for cleanliness and legibility. Make sure none of the decals and placards are missing. Make sure all illegible decals and placards are cleaned or replaced.
4. **Operation and Safety Manuals** – Make sure a copy of the Operator and Safety Manual, AEM Safety Manual (ANSI markets only), and ANSI Manual of Responsibilities (ANSI markets only) is enclosed in the weather resistant storage container.
5. **Daily Walk-Around Inspection** – Perform as instructed.
6. **Battery –** Charge as required.
7. **Fuel** (Combustion Engine Powered Machines) – Add the proper fuel as necessary.
8. **Engine Oil Supply** - Ensure the engine oil level is at the Full mark on the dipstick and the filler cap is secure.
9. **Hydraulic Oil** – Check the hydraulic oil level. Ensure hydraulic oil is added as required.
10. **Accessories/Attachments** - Reference the Operator and Safety Manual of each attachment or accessory installed upon the machine for specific inspection, operation, and maintenance instructions.
11. **Function Check** – Once the "Walk-Around" Inspection is complete, perform a functional check of all systems in an area free of overhead and ground level obstructions. Refer to Section 4 for more specific operating instructions.

⚠ WARNING

IF THE MACHINE DOES NOT OPERATE PROPERLY, TURN OFF THE MACHINE IMMEDIATELY! REPORT THE PROBLEM TO THE PROPER MAINTENANCE PERSONNEL. DO NOT OPERATE THE MACHINE UNTIL IT IS DECLARED SAFE FOR OPERATION.

Daily Walk-Around Inspection

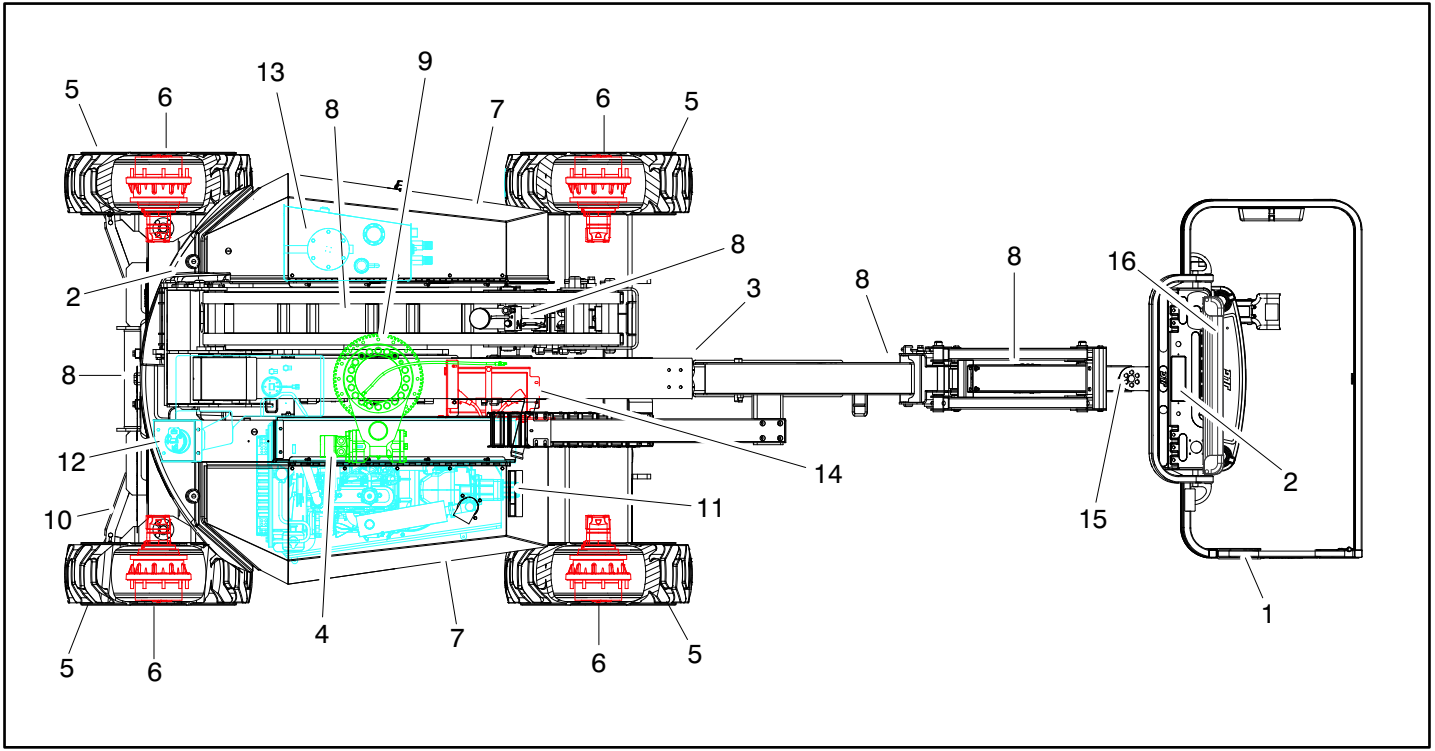

General

Begin the "Walk-Around Inspection" at Item 1, as noted on the diagram. Continue checking each item in sequence for the conditions listed in the following checklist.

⚠ WARNING

TO AVOID POSSIBLE INJURY, BE SURE MACHINE POWER IS OFF.

DO NOT OPERATE MACHINE UNTIL ALL MALFUNCTIONS HAVE BEEN CORRECTED.

***INSPECTION NOTE**: On all components, make sure there are no loose or missing parts, that they are securely fastened, and no visible damage, leaks or excessive wear exists in addition to any other criteria mentioned.*

1. **Platform Assembly and Gate** - Footswitch works properly, not modified, disabled or blocked. Latch and hinges in working condition.
2. **Platform & Ground Control Consoles** - Switches and levers return to neutral, decals/placards secure and legible, control markings legible.
3. **Boom Sections/Uprights/Turntable** - See Inspection Note.
4. **Swing Motor and Worm Gear** - No evidence of damage.
5. **Wheel/Tire Assemblies** - Properly secured, no missing lug nuts. Inspect for worn tread, cuts, tears or other discrepancies. Inspect wheels for damage and corrosion.
6. **Drive Motor, Brake, and Hub** - No evidence of leakage.
7. **Hood Assemblies** - See Inspection Note.
8. **All Hydraulic Cylinders** - No visible damage; pivot pins and hydraulic hoses undamaged, not leaking.
9. **Turntable Bearing** - Evidence of proper lubrication. No evidence of loose bolts or looseness between bearing and machine.
10. **Tie Rod Ends and Steering Spindles** - See Inspection Note.
11. **Hydraulic Pump** - See Inspection Note.
12. **Fuel Tank** - See Inspection Note.
13. **Hydraulic Reservoir** - See Inspection Note.
14. **Battery** - Batteries have proper electrolyte level; cables tight; see Inspection Note.
15. **Platform Rotator** - See Inspection Note.
16. **SkyGuard** - See Inspection Note.

Function Check

Perform the Function Check as follows:

1. From the ground control console with no load in the platform:
   - **a.** Check that all guards protecting the switches or locks are in place;
   - **b.** Operate all functions and ensure proper operation;
   - **c.** Check auxiliary descent and ensure proper operation;
   - **d.** Ensure that all machine functions are disabled when the Emergency Stop Button is pushed in.
   - **e.** Ensure all boom functions stop when the function enable switch is released.
2. From the platform control console:
   - **a.** Ensure that the control console is firmly secured in the proper location;
   - **b.** Check that all guards protecting the switches or locks are in place;
   - **c.** Operate all functions and ensure proper operation;
   - **d.** Ensure that all machine functions are disabled when the Emergency Stop Button is pushed in.
   - **e.** Ensure that all machine functions stop when the footswitch is released.
3. With the platform in the stowed position:
   - **a.** Drive the machine on a grade, not to exceed the rated gradeability, and stop to ensure the brakes hold;
   - **b.** Check that the tilt indicator is illuminated to ensure proper operation.
4. Swing the boom over either of the rear tires and ensure that the Drive Orientation indicator illuminates and that the Drive Orientation Override switch must be used for the drive function to operate.

SkyGuard Function Test

NOTE: *Refer to Section 4.10 for additional information on SkyGuard operation.*

From the Platform Console in an area free from obstructions:

1. Operate the telescope out function.
2. Activate the SkyGuard sensor:
   a. **SkyGuard -** Apply approximately 50 lb (222 Nm) of force to yellow bar.
   b. **SkyGuard - SkyLine -** Press cable to break magnetic connection between the cable and right bracket.
   c. **SkyGuard - SkyEye -** Put arm or hand in path of sensor beam.
3. Once the sensor has been activated, verify the following conditions:
   a. Telescope out function stops and telescope in function operates for a short duration.
   b. The horn sounds.
   c. If equipped with a SkyGuard beacon, the beacon illuminates.
4. Disengage the SkyGuard sensor, release controls, then recycle the footswitch. Ensure normal operation is available.

NOTE: *On machines equipped with SkyLine, reattach magnetic end of the cable to the bracket.*

If SkyGuard remains activated after function reversal or cutout, depress and hold the SkyGuard Override Switch to allow normal use of machine functions until the sensor is disengaged.

2.3 OSCILLATING AXLE LOCKOUT TEST (IF EQUIPPED)

NOTICE

LOCKOUT SYSTEM TEST MUST BE PERFORMED QUARTERLY, ANY TIME A SYSTEM COMPONENT IS REPLACED, OR WHEN IMPROPER SYSTEM OPERATION IS SUSPECTED.

NOTE: *Ensure boom is fully retracted, lowered, and centered between rear wheels prior to beginning lockout cylinder test.*

1. Place a 6 inches (15.2 cm) high block with ascension ramp in front of left front wheel.
2. From platform control station, start engine.
3. Place the Drive control lever to the forward position and carefully drive machine up ascension ramp until left front wheel is on top of block.
4. Carefully activate Swing control lever and position boom over right side of machine.
5. With boom over right side of machine, place Drive control lever to Reverse and drive machine off of block and ramp.
6. Have an assistant check to see that left front or right rear wheel remains elevated in position off of ground.
7. Carefully activate Swing control lever and return boom to stowed position (centered between rear wheels). When boom reaches center, stowed position, lockout cylinders should release and allow wheel to rest on ground, it may be necessary to activate Drive to release cylinders.
8. Place the 6 inches (15.2 cm) high block with ascension ramp in front of right front wheel.
9. Place Drive control lever to Forward and carefully drive machine up ascension ramp until right front wheel is on top of block.
10. With boom over left side of machine, place Drive control lever to Reverse and drive machine off of block and ramp.
11. Have an assistant check to see that right front or left rear wheel remains elevated in position off of ground.
12. Carefully activate Swing control lever and return boom to stowed position (centered between rear wheels). When boom reaches center, stowed position, lockout cylinders should release and allow wheel to rest on ground, it may be necessary activate Drive to release cylinders.
13. If lockout cylinders do not function properly, have qualified personnel correct the malfunction prior to any further operation.

SECTION 3. MACHINE CONTROLS AND INDICATORS

3.1 GENERAL

NOTICE

THE MANUFACTURER HAS NO DIRECT CONTROL OVER MACHINE APPLICATION AND OPERATION. THE USER AND OPERATOR ARE RESPONSIBLE FOR CONFORMING WITH GOOD SAFETY PRACTICES.

This section provides the necessary information needed to understand control functions.

3.2 CONTROLS AND INDICATORS

NOTE: *All machines are equipped with control panels that use symbols to indicate control functions. On ANSI machines refer to decal located on the control box guard in front of the control box or by the ground controls for these symbols and the corresponding functions.*

NOTE: *The indicator panels use different shaped symbols to alert the operator to different types of operational situations that could arise. The meaning of those symbols are explained below.*

Indicates a potentially hazardous situation, which if not corrected, could result in serious injury or death. This indicator will be red.

Indicates an abnormal operating condition, which if not corrected, may result in machine interruption or damage. This indicator will be yellow.

Indicates important information regarding the operating condition, i.e. procedures essential for safe operation. This indicator will be green with the exception of the capacity indicator which will be green or yellow depending upon platform position.

WARNING

TO AVOID SERIOUS INJURY, DO NOT OPERATE MACHINE IF ANY CONTROL LEVERS OR TOGGLE SWITCHES CONTROLLING PLATFORM MOVEMENT DO NOT RETURN TO THE OFF POSITION WHEN RELEASED.

Ground Control Station

See Figure 3-1., Ground Control Station and Figure 3-2., Ground Control Station with Machine Safety System Override (MSSO) (CE Only)

1. Indicator Panel

The Indicator Panel contains indicator lights that signal problem conditions or functions operating during machine operation.

NOTE: *The Function Enable switch must be held down in order to operate Main Boom Telescope, Tower Lift, Swing, Main Lift, Jib Lift, Platform Level Override, and Platform Rotate functions.*

2. Hourmeter

Registers the amount of time the machine has been in use, with engine running. The hourmeter registers up to 9,999.9 hours and cannot be reset.

CAUTION

WHEN THE MACHINE IS SHUT DOWN THE POWER/EMERGENCY STOP SWITCH MUST BE POSITIONED TO THE OFF POSITION TO PREVENT DRAINING THE BATTERIES.

3. Power/Emergency Stop Switch

A two-position red mushroom shaped switch supplies power to PLATFORM/GROUND SELECT switch when pulled out (on). When pushed in (off), power is shut off to the PLATFORM/GROUND SELECT switch.

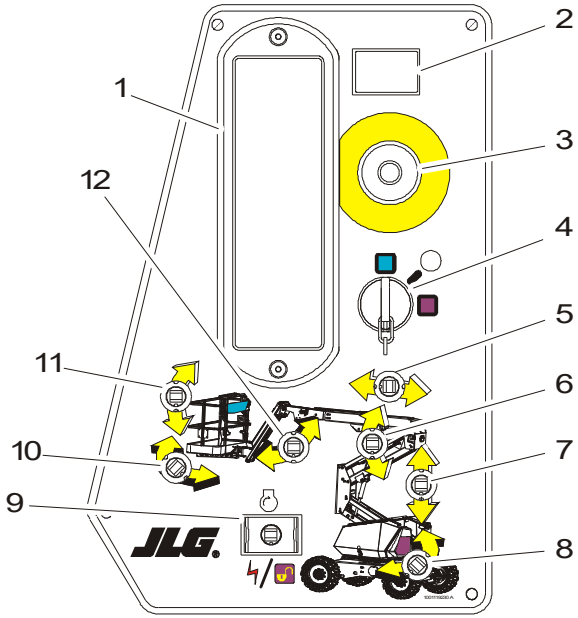

1. Indicator Panel
2. Hourmeter
3. Power/Emergency Stop
4. Platform/Ground Select
5. Telescope
6. Main Boom Lift
7. Tower Boom Lift
8. Swing
9. Engine Start/Auxiliary Descent Enable/ Function Enable
10. Platform Rotate
11. Platform Level
12. Jib Lift

Figure 3-1. Ground Control Station

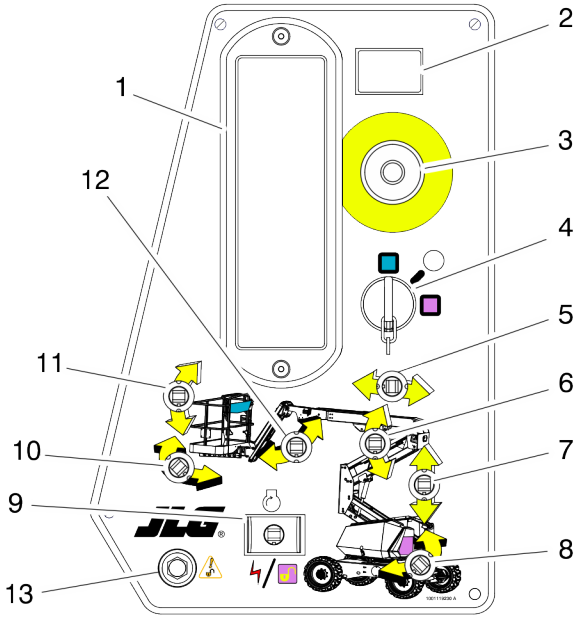

1. Indicator Panel
2. Hourmeter
3. Power/Emergency Stop
4. Platform/Ground Select
5. Telescope
6. Main Boom Lift
7. Tower Boom Lift
8. Swing
9. Engine Start/Auxiliary Descent Enable/ Function Enable
10. Platform Rotate
11. Platform Level
12. Jib Lift
13. Machine Safety System Override (MSSO)

Figure 3-2. Ground Control Station with Machine Safety System Override (MSSO) (CE Only)

NOTE: *When the Platform/Ground Select Switch is in the center position, power is shut off to the controls at both operating stations. Remove the key to prevent the controls from being actuated. .*

4. Platform/Ground Select Switch

The three position, key operated switch supplies power to the platform control console when positioned to PLATFORM. With the switch key turned to the GROUND position only ground controls are operable.

5. Telescope Control

Provides extension and retraction of the boom.

6. Main Boom Lift

Provides raising/lowering of the main boom when positioning up or down.

7. Tower Boom Lift

Provides raising and lowering of the tower boom.

8. Swing

Provides 355 degrees non-continuous turntable rotation.

9. Engine Start/ Auxiliary Descent Enable /Function Enable

To start the engine, the switch must be held "UP" until the engine starts.

To use auxiliary descent enable, the switch must be held “DOWN” for duration of function use.

When the engine is running, the switch must be held "DOWN" to enable all boom controls.

10. Platform Rotate

Provides rotation of the platform.

WARNING

ONLY USE THE PLATFORM LEVELING OVERRIDE FUNCTION FOR SLIGHT LEVELING OF THE PLATFORM. INCORRECT USE COULD CAUSE THE LOAD/OCCUPANTS TO SHIFT OR FALL. FAILURE TO DO SO COULD RESULT IN DEATH OR SERIOUS INJURY.

11. Platform Leveling Override

A three position switch allows the operator to adjust the automatic self leveling system. This switch is used to adjust platform level in situations such as ascending/descending a grade.

12. Jib Lift

Provides raising and lowering of the jib.

13. Machine Safety System Override (MSSO) (CE Only)

Provides emergency override of function controls that are locked out in the event of Load Sense System activation.

Ground Control Indicator Panel

(See Figure 3-3., Ground Control Indicator Panel)

1. Drive and Steer Disable Indicator (If equipped)

   Indicates the Drive and Steer Disable function has been activated.

2. High Engine Temperature Indicator

   Indicates that engine coolant temperature is abnormally high and service is required.

3. Low Engine Oil Pressure Indicator

   Indicates that engine oil pressure is below normal and service is required.

4. Battery Malfunction Indicator

   Indicates a problem in the battery or charging circuit, and service is required.

5. Low Fuel Level Indicator

   Indicates the fuel level is low. The Fuel Reserve/Cut-Out System will shut the engine down (or allow it start and run for an additional minute, depending upon machine setup) before the fuel tank is emptied.

6. Glow Plug Indicator

   Indicates the glow plugs are operating. After turning on ignition, wait until light goes out before cranking engine.

7. System Distress Indicator

   The light indicates that the JLG Control System has detected an abnormal condition and a Diagnostic Trouble Code has been set in the system memory. Refer to the Service Manual for instructions concerning the trouble codes and trouble code retrieval.

   The system distress indicator light will illuminate for 2-3 seconds when the key is positioned to the on position to act as a self test.

8. Platform Overload Indicator (If Equipped)

   Indicates the platform has been overloaded.

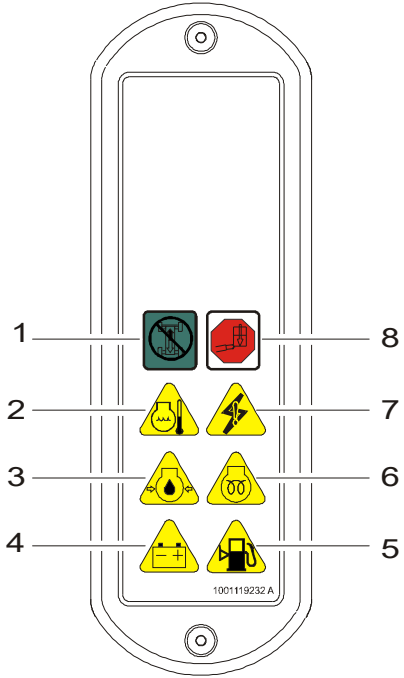

1. Drive and Steer Disable
2. High Engine Coolant Temperature
3. Low Engine Oil Pressure
4. Battery Malfunction
5. Low Fuel
6. Glow Plug
7. System Distress
8. Platform Overload

Figure 3-3. Ground Control Indicator Panel

Platform Station

(See Figure 3-4., Platform Control Console)

⚠ WARNING

TO AVOID SERIOUS INJURY, DO NOT OPERATE MACHINE IF ANY CONTROL LEVERS OR TOGGLE SWITCHES CONTROLLING PLATFORM MOVEMENT DO NOT RETURN TO THE OFF OR NEUTRAL POSITION WHEN RELEASED.

1. Drive Speed/Torque Select

   The machine has a three position switch - The forward position gives maximum drive speed by allowing the drive pump to go to maximum displacement and the engine to go to maximum RPM when the drive controller is moved. The back position gives maximum torque for rough terrain and climbing grades by reducing the drive pump displacement and keeping the engine at high RPM, when the drive controller is moved. The center position allows the machine to be driven as quietly as possible by leaving the engine at mid engine, and the drive pump at a reduced displacement.

⚠ WARNING

ONLY USE THE PLATFORM LEVELING OVERRIDE FUNCTION FOR SLIGHT LEVELING OF THE PLATFORM. INCORRECT USE COULD CAUSE THE LOAD/OCCUPANTS TO SHIFT OR FALL. FAILURE TO DO SO COULD RESULT IN DEATH OR SERIOUS INJURY.

2. Platform Leveling Override

   A three position switch allows the operator to adjust the automatic self leveling system. This switch is used to adjust platform level in situations such as ascending/descending a grade.

3. Horn

   A push-type HORN switch supplies electrical power to an audible warning device when pressed.

4. Power/Emergency Stop Switch

   A two-position red mushroom shaped switch furnishes power to PLATFORM Controls when pulled out (on). When pushed in (off), power is shut off to the platform functions.

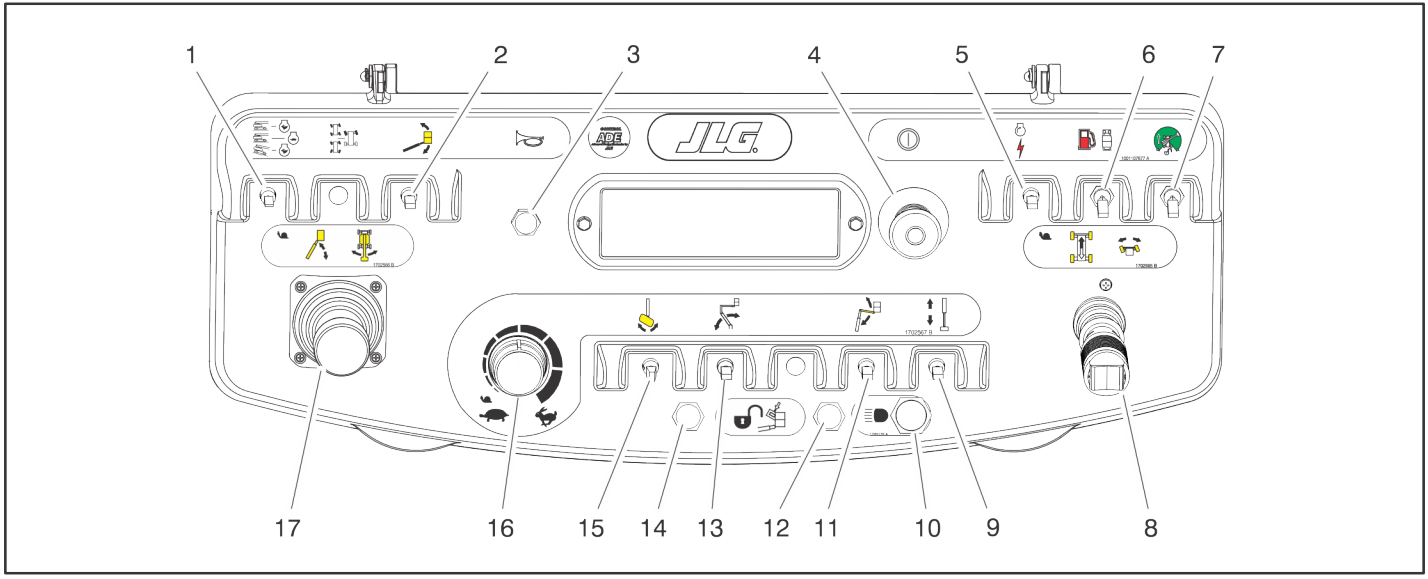

1. Drive Speed/Torque Select
2. Platform Leveling Override
3. Horn
4. Power/Emergency Stop
5. Start/Auxiliary Descent Enable
6. Fuel Select
7. Drive Orientation Override
8. Drive/Steer
9. Telescope
10. Lights
11. Jib Lift
12. SkyGuard Override
13. Tower Boom Lift
14. SkyGuard Indicator
15. Platform Rotate
16. Function Speed Control
17. Main Lift/Swing Controller

Figure 3-4. Platform Control Console

5. Start/Auxiliary Descent Enable

When pushed forward, the switch energizes the starter motor to start the engine.

When pushed back, it energizes Auxiliary Descent Enable which allows the boom and jib to be lowered in the event of engine malfunction. Gravity is used to control valves and lower the booms and jib. The functions that can be operated with this control are:

- Main Lift Down
- Tower Lift Down
- Jib Lift Down

6. Fuel Select (Dual Fuel Engine Only) (If Equipped)

Moving the switch to the appropriate position selects gasoline or liquid propane fuel.

7. Drive Orientation Override

When the boom is swung over the rear tires or further in either direction, the Drive Orientation indicator will illuminate when the drive function is selected. Push and release the switch, and within 3 seconds move the Drive/Steer control to activate drive or steer. Before driving, locate the black/white orientation arrows on both the chassis and the platform controls. Move the drive controls in a direction matching the directional arrows.

NOTE: *To operate the Drive joystick, pull up on the locking ring below the handle.*

NOTE: *The Drive joystick is spring loaded and will automatically return to neutral (off) position when released.*

8. Drive/Steer

Push forward to drive forward, pull back to drive in reverse. Steering is accomplished via a thumb-activated rocker switch on the end of the steer handle.

9. Telescope

Provides extension and retraction of the main boom.

10. Lights (If Equipped)

This switch operates the chassis lights if the machine is so equipped.

11. Jib Lift

Provides for raising or lowering of the jib by positioning up/down.

12. SkyGuard Override Switch (If equipped)

If equipped with SkyGuard, the switch enables functions cut out by the Skyguard system to be operated again, allowing the operator to resume use of machine functions.

13. Tower Boom Lift

Provides for raising and lowering of tower boom when positioned up or down.

14. SkyGuard Indicator (If Equipped)

Indicates the SkyGuard sensor has been activated. All controls are cut out until the override button is pushed. Controls will then work normally.

15. Platform Rotate

Provides rotation of the platform when positioned to the right or left.

16. Function Speed Control

This control affects the speed of telescope, tower lift and jib lift. Turning the knob all the way counterclockwise until it clicks puts drive, tower lift and swing into creep mode.

NOTE: *To operate the Main Boom Lift/Swing joystick, pull up on the locking ring below the handle.*

NOTE: *The Main Boom Lift/Swing joystick is spring loaded and will automatically return to neutral (off) position when released.*

17. Main Lift/Swing Controller

Provides main lift and swing. Push forward to lift up, pull backward to boom down. Move right to swing right, move left to swing left. Moving the joystick activates switches to provide the functions selected.

Platform Control Indicator Panel

(See Figure 3-5., Platform Control Indicator Panel)

NOTE: *The indicator lights will illuminate for approximately 1 second when the key is positioned to the on position to act as a self test.*

1. AC Generator (If Equipped)

Indicates the generator is in operation.

2. Platform Overload Indicator (If Equipped)

Indicates the platform has been overloaded.

3. Tilt Alarm Warning Light and Alarm

Tilt Angle	Market
3°	CE & Australia
5°	ANSI, CSA & Japan

This red illuminator indicates that the chassis is on a slope. An alarm will also sound when the chassis is on a slope and the boom is out of transport position. If lit when boom is out of transport position, lower to below horizontal then reposition machine so that it is level before continuing operation. If the boom is above horizontal and the machine is on a slope, the tilt alarm warning light will illuminate and an alarm will sound and CREEP is automatically activated.

⚠ WARNING

IF TILT WARNING LIGHT IS ILLUMINATED WHEN BOOM IS RAISED OR EXTENDED, RETRACT AND LOWER TO BELOW HORIZONTAL THEN REPOSITION MACHINE SO THAT IT IS LEVEL BEFORE EXTENDING BOOM OR RAISING BOOM ABOVE HORIZONTAL.

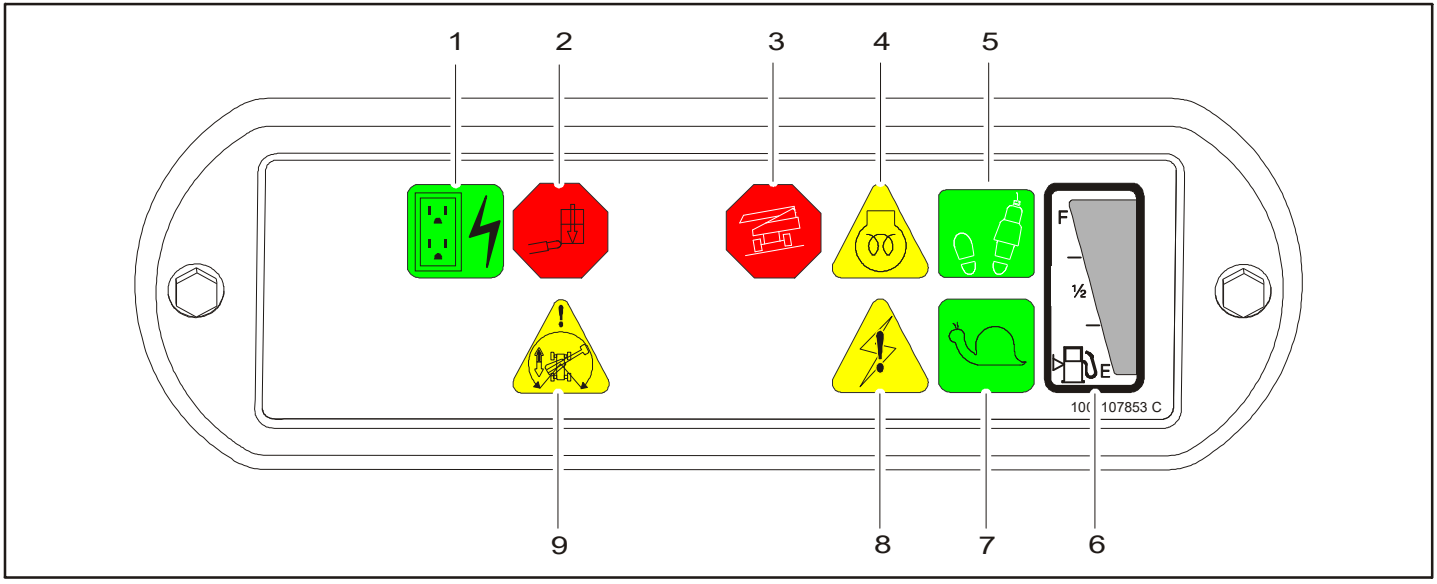

1. AC Generator
2. Platform Overload
3. Tilt
4. Glow Plug/Wait to Start
5. Enable/Footswitch
6. Fuel Level
7. Creep
8. System Distress
9. Drive Orientation

Figure 3-5. Platform Control Indicator Panel

4. Glow Plug/Wait to Start Indicator

   Indicates the glow plugs are operating. After turning on ignition, wait until light goes out before starting engine.

5. Enable Indicator/Footswitch

   To operate any function, the footswitch must be depressed and the function selected within seven seconds. The enable indicator shows that the controls are enabled. If a function is not selected within seven seconds, or if a seven second lapse between ending one function and beginning the next function, the enable light will go out and the footswitch must be released and depressed again to enable the controls.

   Releasing the footswitch removes power from all controls and applies the drive brakes.

⚠ WARNING

TO AVOID SERIOUS INJURY, DO NOT REMOVE, MODIFY OR DISABLE THE FOOTSWITCH BY BLOCKING OR ANY OTHER MEANS.

⚠ WARNING

FOOTSWITCH MUST BE ADJUSTED IF FUNCTIONS ACTIVATE WHEN SWITCH ONLY OPERATES WITHIN LAST 1/4" OF TRAVEL, TOP OR BOTTOM.

6. Fuel Level Indicator

   Indicates the level of fuel in the tank.

7. Creep Speed Indicator

   When the Function Speed Control is turned to the creep position, the indicator acts as a reminder that all functions are set to the slowest speed. The light flashes if the control system puts the machine into creep speed and will be on continuously if the operator selects creep speed.

8. System Distress Indicator

The light indicates that the JLG Control System has detected an abnormal condition and a Diagnostic Trouble Code has been set in the system memory. Refer to the Service Manual for instructions concerning the trouble codes and trouble code retrieval.

9. Drive Orientation Indicator

When the boom is swung beyond the rear drive tires or further in either direction, the Drive Orientation indicator will illuminate when the drive function is selected. This is a signal for the operator to verify that the drive control is being operated in the proper direction (i.e. controls reversed situations).

SECTION 4. MACHINE OPERATION

4.1 DESCRIPTION

This machine is a mobile elevating work platform used to position personnel, along with their necessary tools and materials at work locations.

The primary operator control station is in the platform. From this control station, the operator can drive and steer the machine in both forward and reverse directions. The operator can raise or lower the boom or swing the boom to the left or right. Standard boom swing is 355 degree non-continuous. The machine has a Ground Control Station which will override the Platform Control Station. Ground Controls operate Boom Lift and Swing, and are to be used in an emergency to lower the platform to the ground should the operator in the platform be unable to do so.

4.2 BOOM OPERATING CHARACTERISTICS AND LIMITATIONS

Capacities

Raising boom above horizontal with or without any load in platform, is based on the following criteria:

1. Machine is positioned on a smooth, firm and level surface.
2. Load is within manufacturers rated design capacity.
3. All machine systems are functioning properly.
4. Machine is as originally equipped from JLG.

Stability

Machine stability is based on two (2) conditions which are called FORWARD and BACKWARD stability. The machine's position of least FORWARD stability is shown in Figure 4-1., and its position of least BACKWARD stability is shown in Figure 4-2.

WARNING

TO AVOID FORWARD OR BACKWARD TIPPING, DO NOT OVERLOAD MACHINE OR OPERATE THE MACHINE ON AN OUT-OF-LEVEL SURFACE.

4.3 ENGINE OPERATION

NOTE: *Initial starting should always be performed from the Ground Control station.*

Starting Procedure

CAUTION

IF ENGINE FAILS TO START PROMPTLY, DO NOT CRANK FOR AN EXTENDED TIME. SHOULD ENGINE FAIL TO START AGAIN, ALLOW STARTER TO "COOL OFF" FOR 2-3 MINUTES. IF ENGINE FAILS AFTER SEVERAL ATTEMPTS, REFER TO ENGINE MAINTENANCE MANUAL.

NOTE: *Diesel engines only: After turning on ignition, operator must wait until glow plug indicator light goes out before cranking engine.*

1. Turn key of SELECT switch to GROUND. Position POWER/EMERGENCY STOP switch to ON, then push the ENGINE START switch until engine starts.

CAUTION

ALLOW ENGINE TO WARM-UP FOR A FEW MINUTES AT LOW SPEED BEFORE APPLYING ANY LOAD.

2. After engine has had sufficient time to warm up, shut engine off.
3. Turn SELECT switch to PLATFORM.
4. From Platform, pull POWER/EMERGENCY STOP switch out, then push the ENGINE START switch until engine starts.

NOTE: *Footswitch must be in released (up) position before starter will operate. If starter operates with footswitch in the depressed position, DO NOT OPERATE MACHINE.*

Shutdown Procedure

⚠ CAUTION

IF AN ENGINE MALFUNCTION CAUSES AN UNSCHEDULED SHUTDOWN, DETERMINE THE CAUSE AND CORRECT IT BEFORE RESTARTING THE ENGINE.

1. Remove all load and allow engine to operate at low speed for 3-5 minutes; this allows further reduction of internal engine temperature.
2. Push POWER/EMERGENCY STOP switch in.
3. Turn Platform/Ground Select switch to Off.

Refer to Engine Manufacturer's manual for detailed information.

Fuel Reserve / Shut-Off System (Gas or Diesel Engines Only)

The Fuel Shutoff System senses when the fuel level is getting low and automatically shuts the engine down before the fuel tank is emptied.

Depending upon machine setup, the machine will either keep the engine shut down until the fuel tank is refilled or the operator will be able to restart and run the engine for an additional minute. After 1 minute, the engine will shut off for a second time and the machine will return to the engine shutdown mode until the fuel tank is refilled.

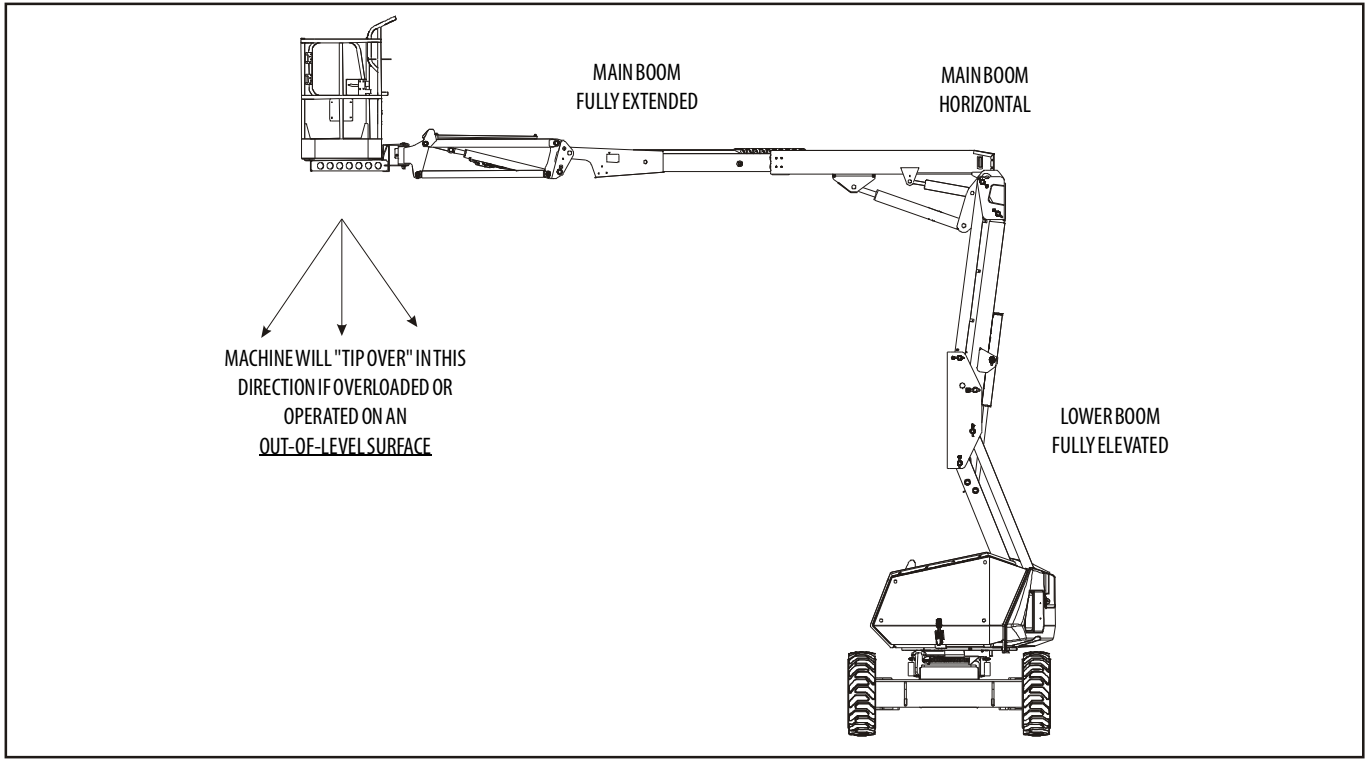

Figure 4-1. Position of Least Forward Stability

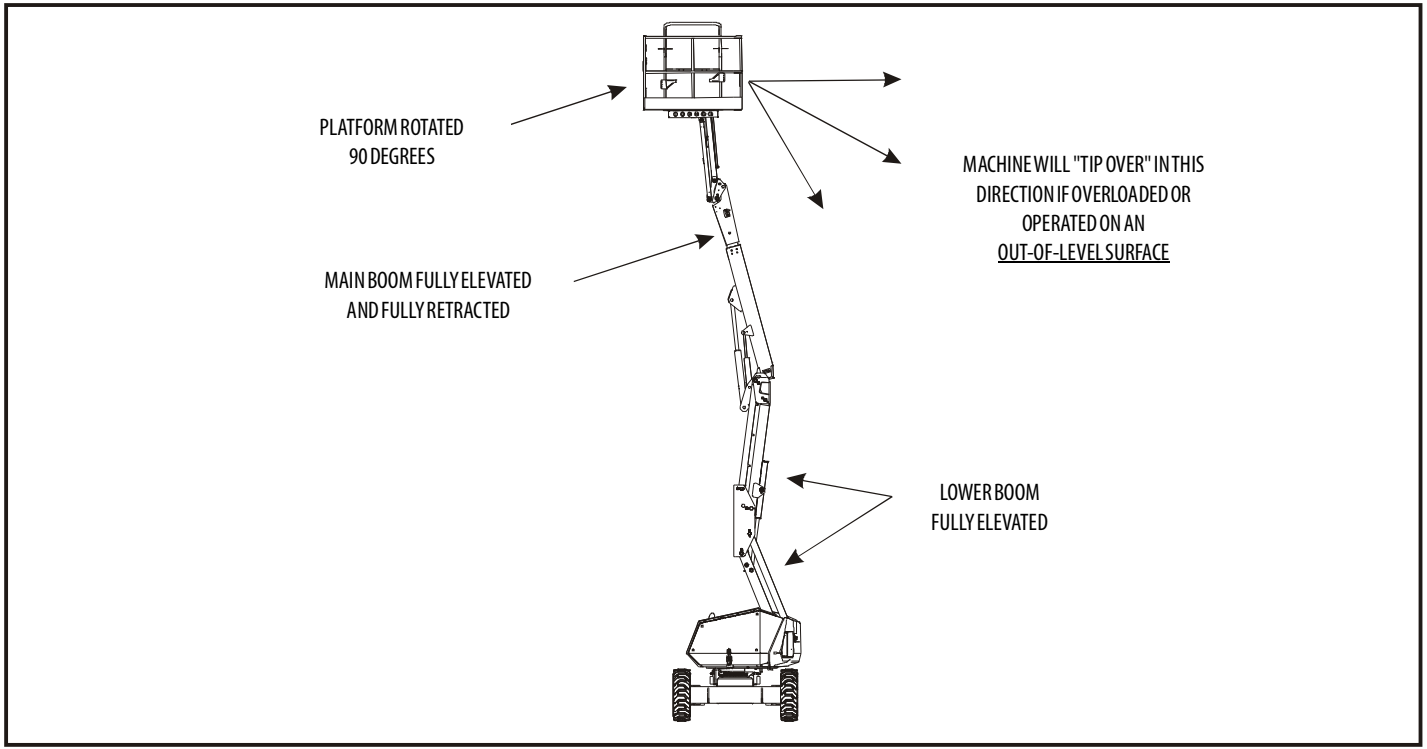

Figure 4-2. Position of Least Backward Stability

4.4 TRAVELING (DRIVING)

See Figure 4-3., Grade and Side Slopes

NOTE: *Refer to the Operating Specifications table for Gradeability and Sideslope ratings.*

All ratings for Gradeability and Sideslope are based upon the machine's boom being in the stowed position, fully lowered, and retracted.

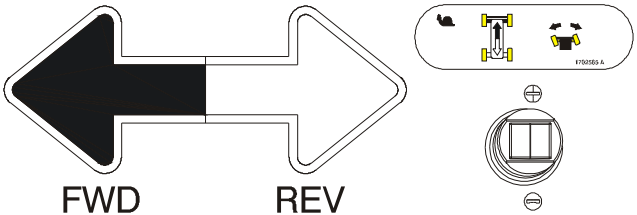

Traveling is limited by two factors:

1. Gradeability, which is the percent of grade of the incline the machine can climb.
2. Sideslope, which is the angle of the slope the machine can be driven across.

WARNING

DO NOT DRIVE WITH BOOM OUT OF TRANSPORT MODE EXCEPT ON A SMOOTH, FIRM AND LEVEL SURFACE.

TO AVOID LOSS OF TRAVEL CONTROL OR "TIP OVER", DO NOT DRIVE MACHINE ON GRADES EXCEEDING THOSE SPECIFIED IN THE OPERATING SPECIFICATIONS SECTION OF THIS MANUAL.

DO NOT DRIVE ON SIDESLOPES WHICH EXCEED 5 DEGREES.

USE EXTREME CAUTION WHEN DRIVING IN REVERSE AND AT ALL TIMES WHEN THE PLATFORM IS ELEVATED.

BEFORE DRIVING, LOCATE THE BLACK/WHITE ORIENTATION ARROWS ON BOTH THE CHASSIS AND THE PLATFORM CONTROLS. MOVE THE DRIVE CONTROLS IN A DIRECTION MATCHING THE DIRECTIONAL ARROWS.

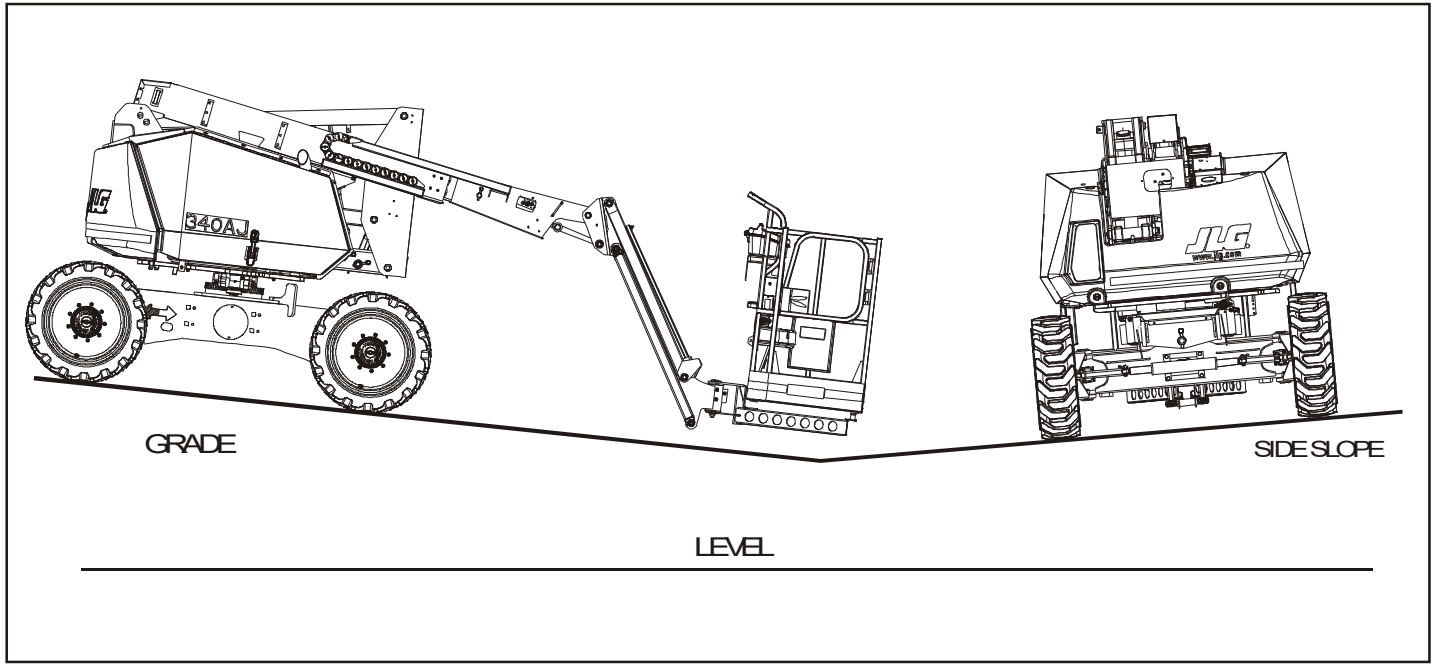

Figure 4-3. Grade and Side Slopes

Traveling Forward and Reverse

3. At Platform Controls, pull out Emergency Stop switch, start engine, and activate footswitch.
4. Position Drive controller to FORWARD or REVERSE as desired.

This machine is equipped with a Drive Orientation Indicator. The yellow light on the platform control console indicates that the boom is swung beyond the rear drive tires and the machine may Drive/Steer in the opposite direction from the movement of the controls. If the indicator is illuminated, operate the Drive function in the following manner:

1. Match the black and white direction arrows on both platform control panel and the chassis to determine the direction the machine will travel.
2. Push and release the Drive Orientation Override switch. Within 3 seconds, slowly move the Drive control toward the arrow matching the intended direction of machine travel. The indicator light will flash during the 3 second interval until the drive function is selected.

4.5 STEERING

Position thumb switch on Drive/Steer controller to RIGHT for steering right, or to LEFT for steering left.

4.6 PLATFORM

⚠ WARNING

ONLY USE THE PLATFORM LEVELING OVERRIDE FUNCTION FOR SLIGHT LEVELING OF THE PLATFORM. INCORRECT USE COULD CAUSE THE LOAD/OCCUPANTS TO SHIFT OR FALL. FAILURE TO DO SO COULD RESULT IN DEATH OR SERIOUS INJURY.

Platform Level Adjustment

To manually Level Up or Down - Position the Platform/Level control switch Up or Down and hold until the desired platform position is obtained.

Platform Rotation

To rotate the platform to the left or right, use the Platform Rotate control switch to select the direction and hold until desired position is reached.

4.7 BOOM

⚠ WARNING

A RED TILT WARNING LIGHT IS LOCATED ON THE CONTROL CONSOLE WHICH LIGHTS WHEN THE CHASSIS IS ON AN EXCESSIVE SLOPE. DO NOT SWING OR RAISE BOOM ABOVE HORIZONTAL WHEN LIGHT IS LIT.

DO NOT DEPEND ON TILT ALARM AS A LEVEL INDICATOR FOR THE CHASSIS. TILT ALARM INDICATES CHASSIS IS ON AN EXCESSIVE SLOPE (3 DEGREE OR GREATER ON CE & AUSTRALIA SPEC MACHINES, 5 DEGREE OR GREATER ON ANSI, CSA, & JAPAN SPEC MACHINES). CHASSIS MUST BE LEVEL BEFORE SWINGING, OR RAISING BOOM ABOVE HORIZONTAL OR DRIVING WITH THE BOOM ELEVATED.

TO AVOID TIP OVER IF RED TILT WARNING LIGHT LIGHTS WHEN BOOM IS RAISED ABOVE HORIZONTAL, LOWER PLATFORM TO GROUND LEVEL. THEN REPOSITION MACHINE SO THAT CHASSIS IS LEVEL BEFORE RAISING BOOM.

TRAVELING WITH BOOM BELOW HORIZONTAL IS PERMITTED ON GRADES AND SIDE SLOPES SPECIFIED IN THE OPERATING SPECIFICATIONS SECTION OF THIS MANUAL.

⚠ WARNING

TO AVOID SERIOUS INJURY, DO NOT OPERATE MACHINERY IF ANY CONTROL LEVER OR TOGGLE SWITCH CONTROLLING PLATFORM MOVEMENT DOES NOT RETURN TO THE 'OFF' OR NEUTRAL POSITION WHEN RELEASED.

⚠ CAUTION

TO AVOID A COLLISION AND INJURY IF PLATFORM DOES NOT STOP WHEN A CONTROL SWITCH OR LEVER IS RELEASED, REMOVE FOOT FROM FOOTSWITCH OR USE EMERGENCY STOP SWITCH TO STOP THE MACHINE.

Swinging the Boom

To swing boom, use Swing control to select Right or Left direction.

Raising and Lowering the Tower Boom

To raise or lower the Tower Boom, position Tower Boom Lift switch to Up or Down until desired height is reached.

Raising and Lowering the Main Boom

To raise or lower the Main Boom, use Main Boom Lift controller to select UP or DOWN movement.

Telescoping the Main Boom

To extend or retract the main boom, use the Main Telescope Control Switch to select IN or OUT movement.

4.8 FUNCTION SPEED CONTROL

This control affects the speed of telescope, tower boom lift and jib lift. Turning the knob all the way counterclockwise until it clicks puts drive, main lift, platform rotate, and swing into creep mode.

4.9 MACHINE SAFETY SYSTEM OVERRIDE (MSSO)(CE ONLY)

The Machine Safety System Override (MSSO) is used to override function controls for Emergency Platform Retrieval only. Refer to Section 5.7, Machine Safety System Override (MSSO)(CE Only)for operating procedures.

4.10 SKYGUARD OPERATION

SkyGuard provides enhanced control panel protection. When the SkyGuard sensor is activated, functions in use at the time of actuation will reverse or cutout. The SkyGuard Function Table provides more details on these functions.

During activation, the horn will sound and, if equipped with a SkyGuard beacon, the beacon will illuminate until sensor and footswitch are disengaged.

If the SkyGuard sensor remains activated after function reversal or cutout, depress and hold the SkyGuard Override Switch to allow normal functions until the sensor is disengaged.

Consult the following illustrations to determine which type of SkyGuard the machine has. Regardless of type, SkyGuard function according to the SkyGuard Function Table does not change.

SkyGuard

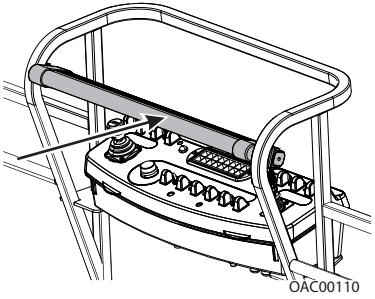

Approximately 50 lb (222 Nm) of force is applied to yellow bar.

SkyGuard - SkyLine

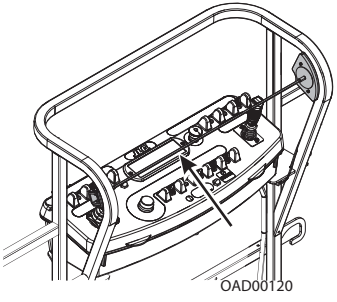

Cable is pressed, breaking the magnetic connection between the cable and right bracket.

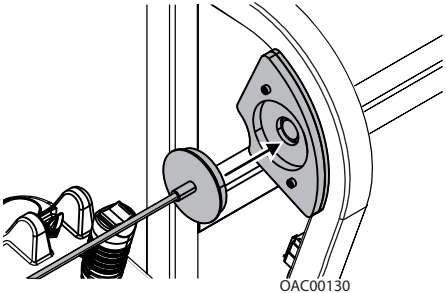

Reattach magnetic end of cable to bracket if it becomes disconnected.

SkyGuard - SkyEye

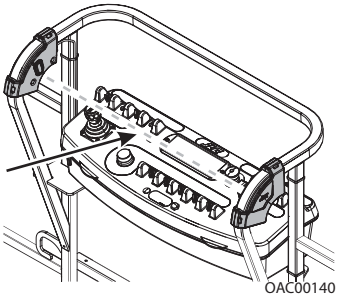

Operator passes through path of sensor beam.

SkyGuard Function Table

Drive Forward	Drive Reverse	Steer	Swing	Tower Lift Up	Tower Lift Down	Boom Lift Up	Boom Lift Down	Boom Tele Out	Boom Tele In	Jib Lift	Basket Level	Basket Rotate
R*/C**	R	C	R	R	C	R	R	R	C	C	C	C
R = Indicates Reversal is Activated												
C = Indicates Cutout is Activated												
* DOS (Drive Orientation System) Enabled												
** DOS Not Enabled, machine is driving straight without steering, and any other hydraulic function is active												

4.11 DUAL FUEL SYSTEM (GAS ENGINE ONLY)

The dual fuel system enables the standard gasoline engine to run on either gasoline or LP gas.

⚠ CAUTION

IT IS POSSIBLE TO SWITCH FROM ONE FUEL SOURCE TO THE OTHER WITHOUT ALLOWING THE ENGINE TO STOP. EXTREME CARE MUST BE TAKEN AND THE FOLLOWING INSTRUCTIONS MUST BE FOLLOWED.

Changing From Gasoline to LP Gas

1. Start engine from Ground Control Station.
2. Open hand valve on LP gas supply tank by turning counterclockwise.
3. While engine is operating on GASOLINE under a no-load condition, place FUEL SELECT switch at Platform Control to LP position.

Changing From LP Gas to Gasoline

1. With engine operating on LP under a no-load condition, position FUEL SELECT switch at Platform Control Station to GASOLINE position.
2. Close hand valve on LP gas supply tank by turning clockwise.

4.12 SHUT DOWN AND PARK

Shut Down and Park

See Figure 4-4.

The procedures to shut down and park the machine are as follows:

1. Drive machine to a reasonably well protected area.
2. Ensure boom is lowered over rear drive axle.
3. Shut down Emergency Stop at Platform Controls.
4. Shut down Emergency Stop at Ground Controls. Position Platform/Ground Select switch to center OFF.
5. If necessary, cover Platform Controls to protect instruction placards, warning decals, and operating controls from hostile environment.

Storage Position

(See Figure 4-5.)

The procedure to place the machine in the storage position is as follows:

1. Place the machine in the stowed position. Refer to Figure 4-4. From the ground control station, raise the main boom at least to the elevation shown in Figure 4-5. The main boom must be raised to prevent the platform basket from hitting the ground during this procedure.
2. Activate Platform Level Down until the platform is in the position shown.

NOTICE

THE PLATFORM BASKET MUST NOT BE IN CONTACT WITH THE GROUND, BLOCKING, OR ANY TIE DOWN EQUIPMENT.

3. Place blocking under the platform support, lower the platform support down onto the blocking by using Main Boom Lift Down, and tie it down as shown in Figure 4-5.

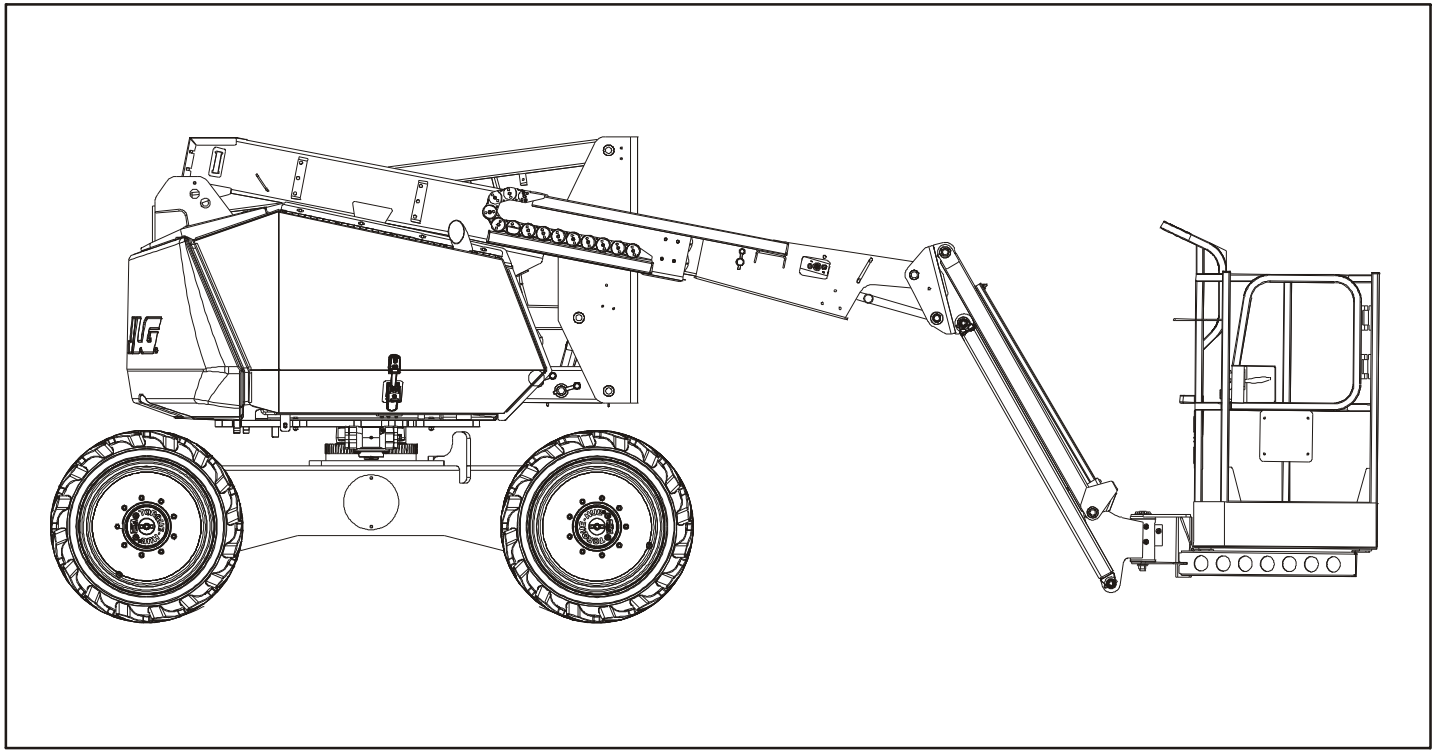

Figure 4-4. Stowed Position

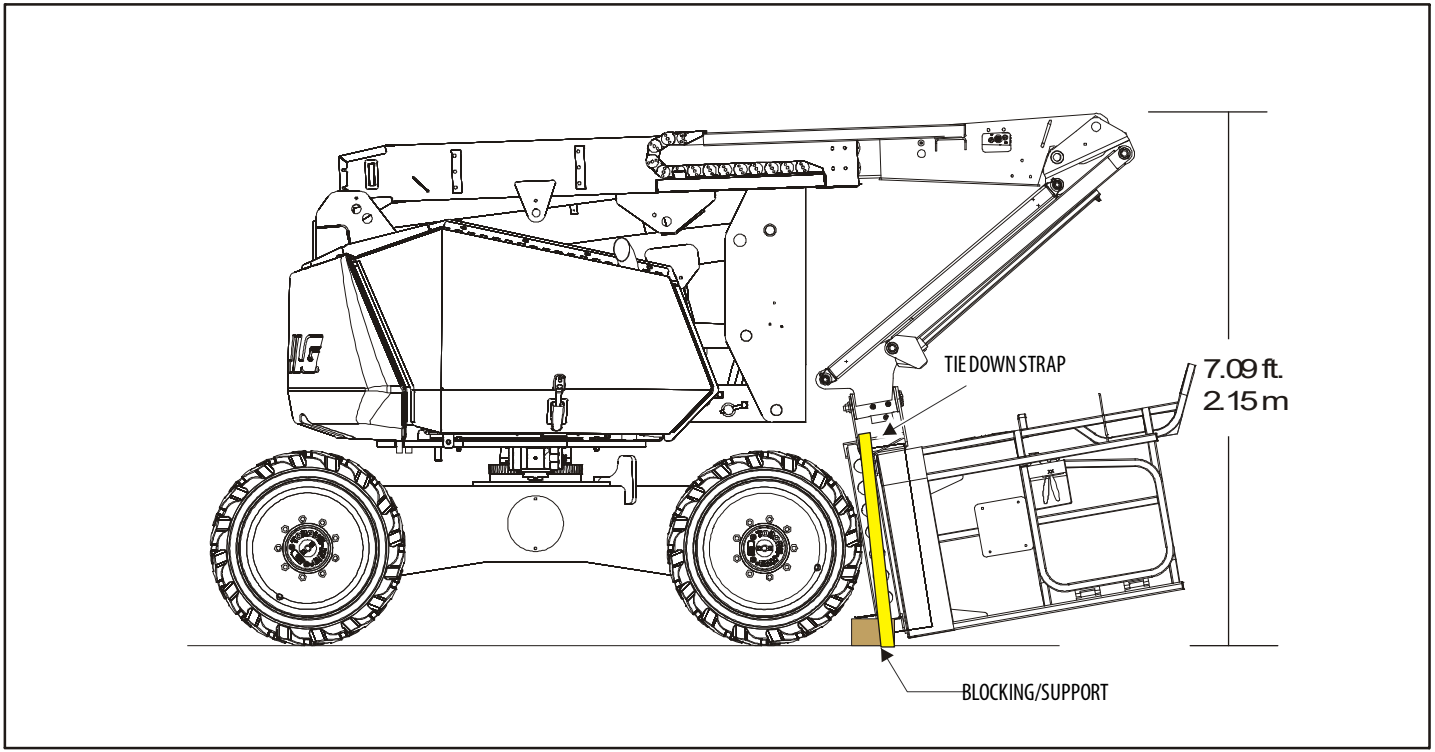

Figure 4-5. Storage Position

4.13 LIFTING AND TIE DOWN

(See Figure 4-6.)

Lifting

1. Refer to the Serial Number Plate, refer to the Specifications section of this manual, or weigh the individual unit to find out the Gross Vehicle Weight.
2. Place the boom in the stowed position.
3. Remove all loose items from the machine.
4. Properly adjust the rigging to prevent damage to the machine and so the machine remains level.

Tie Down

NOTICE

WHEN TRANSPORTING THE MACHINE IN THE STOWED POSITION, THE BOOM MUST BE FULLY LOWERED INTO THE BOOM REST.

1. Place the boom in the stowed position or storage position.
2. Remove all loose items from the machine.
3. Secure the chassis and the platform using straps or chains of adequate strength.

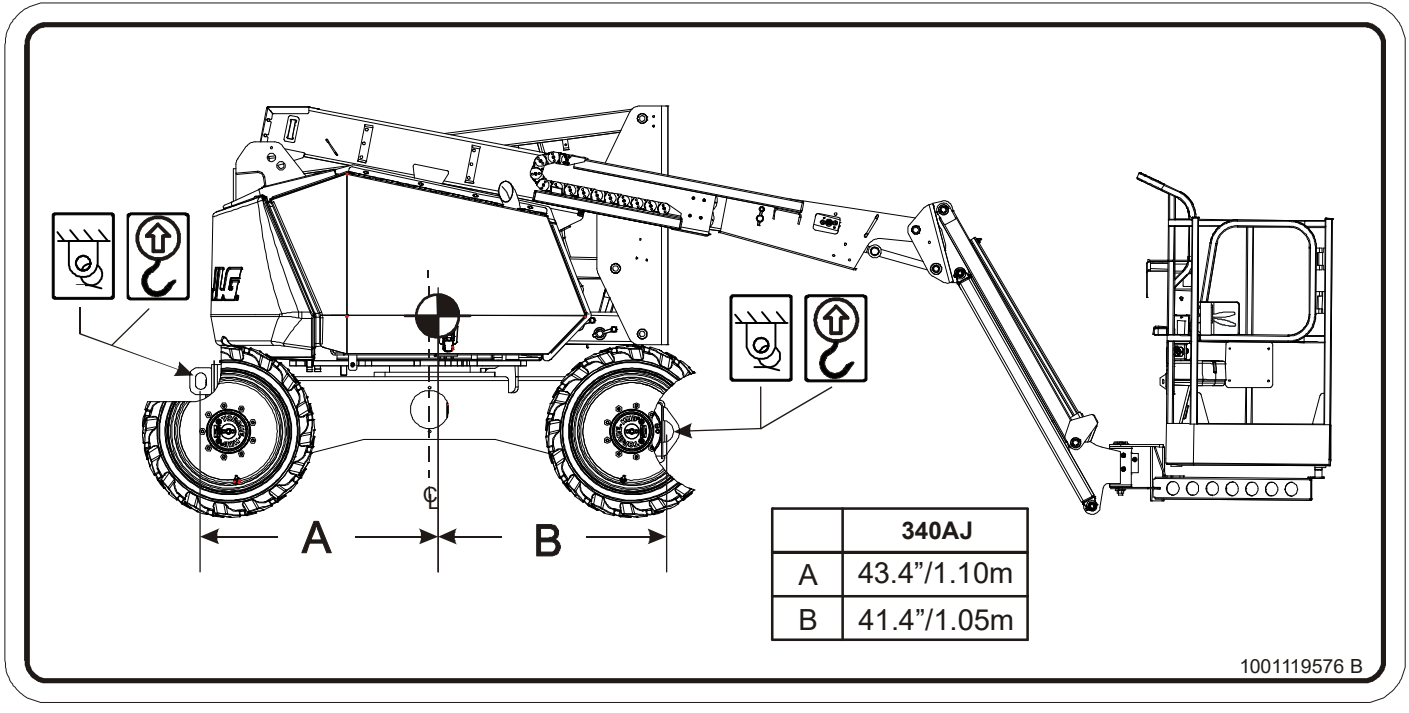

	340AJ
A	43.4”/1.10m
B	41.4”/1.05m

Figure 4-6. Lifting and Tie Down Chart

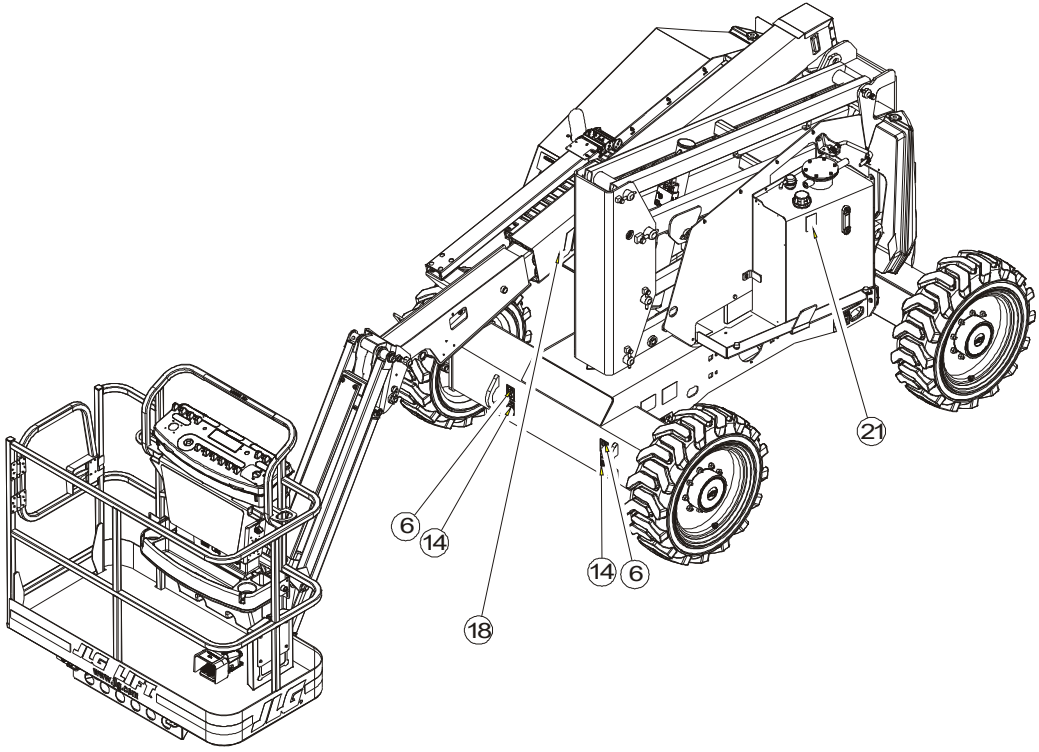

Figure 4-7. Decal Location Sheet 1 of 10

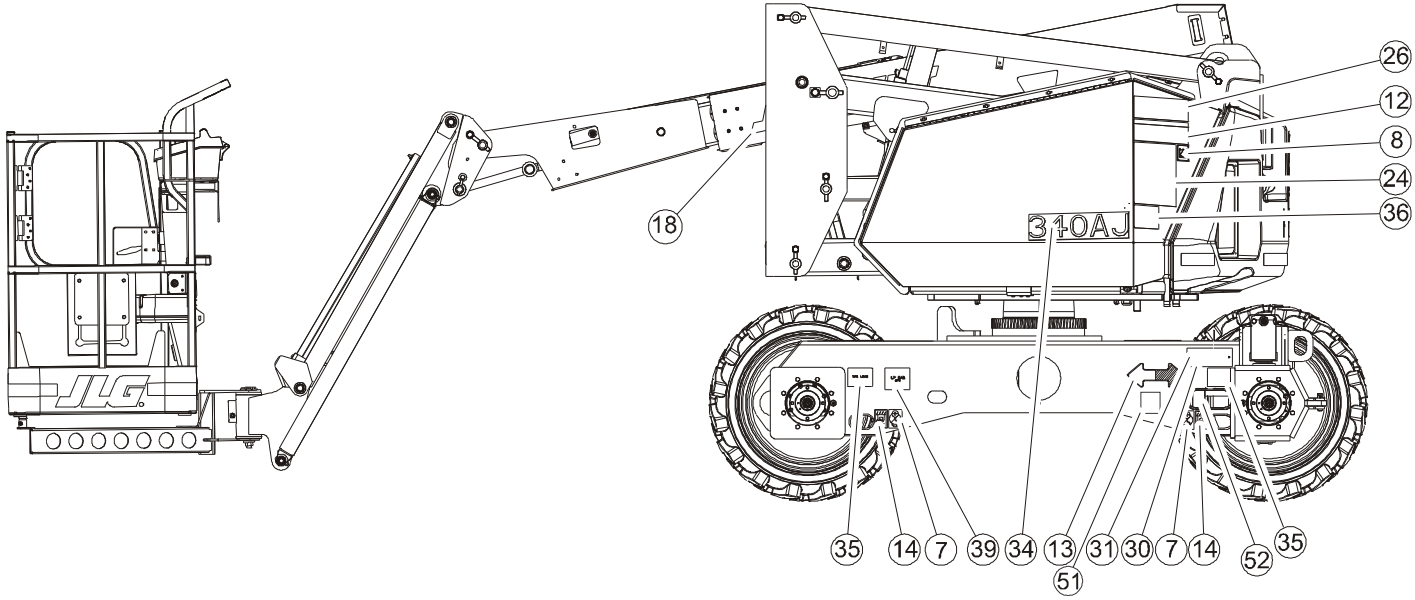

Figure 4-8. Decal Location Sheet 2 of 10

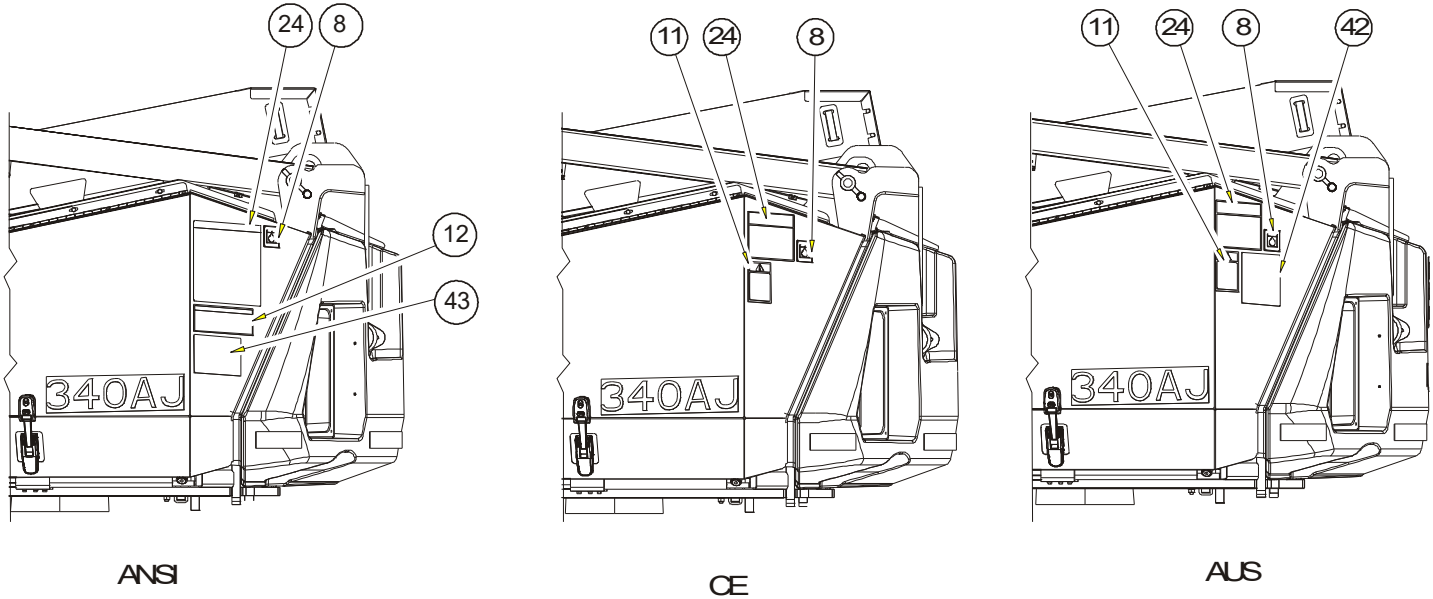

Figure 4-9. Decal Location Sheet 3 of 10

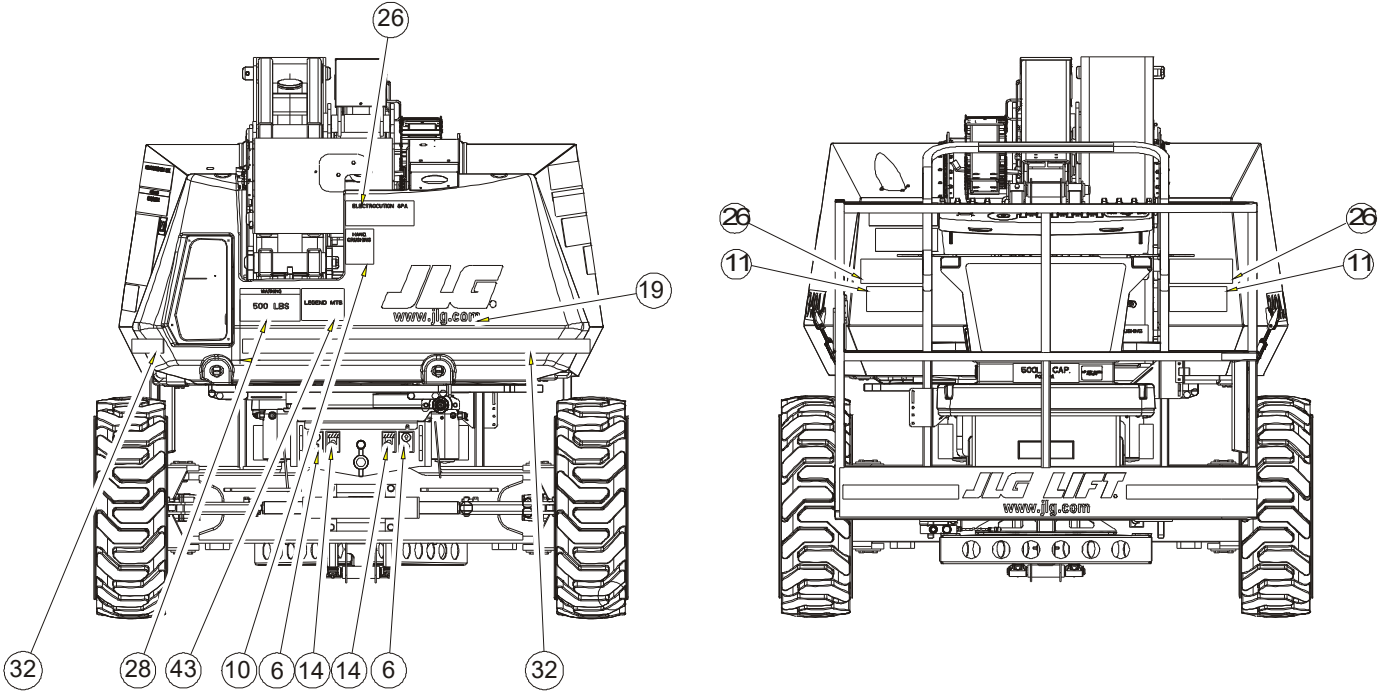

JAPAN-KOREA-CHINESE-PORTUGUESE-SPANISH

Figure 4-10. Decal Location Sheet 4 of 10

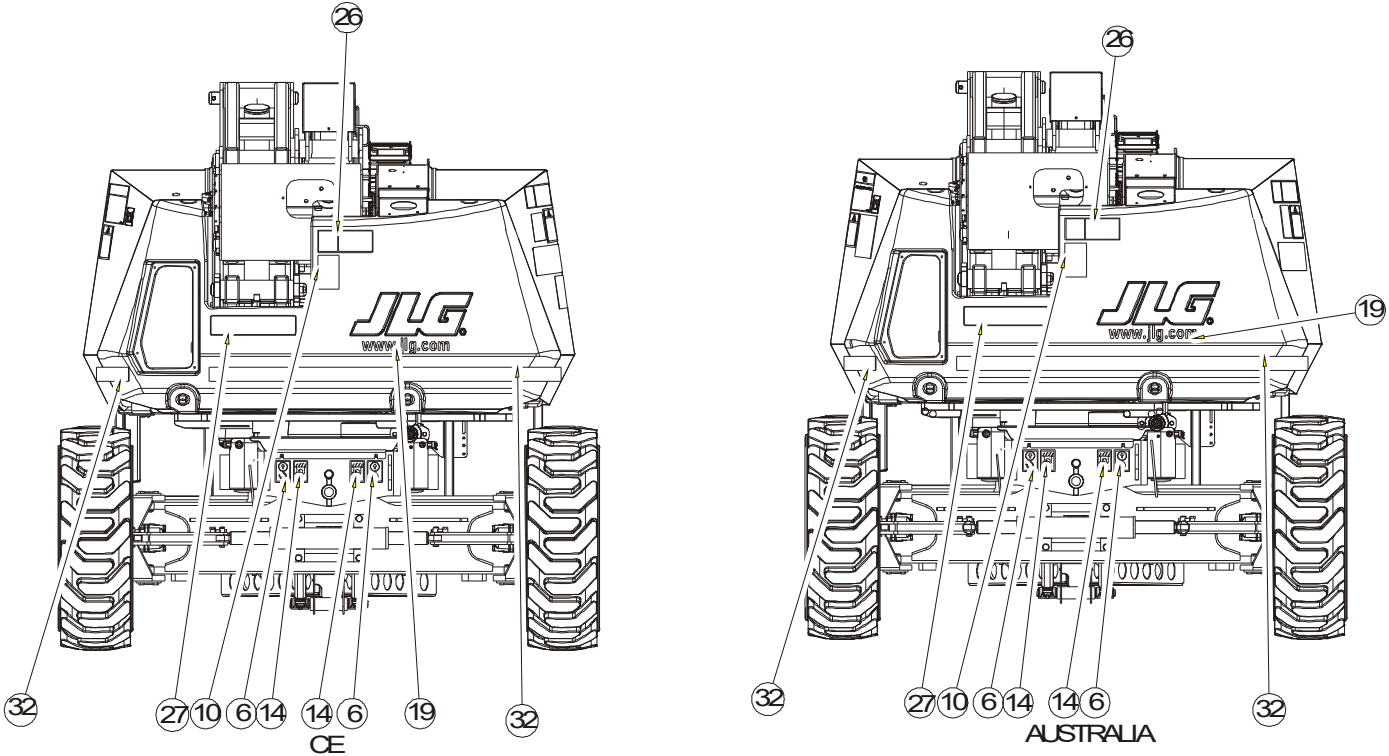

Figure 4-11. Decal Location Sheet 5 of 10

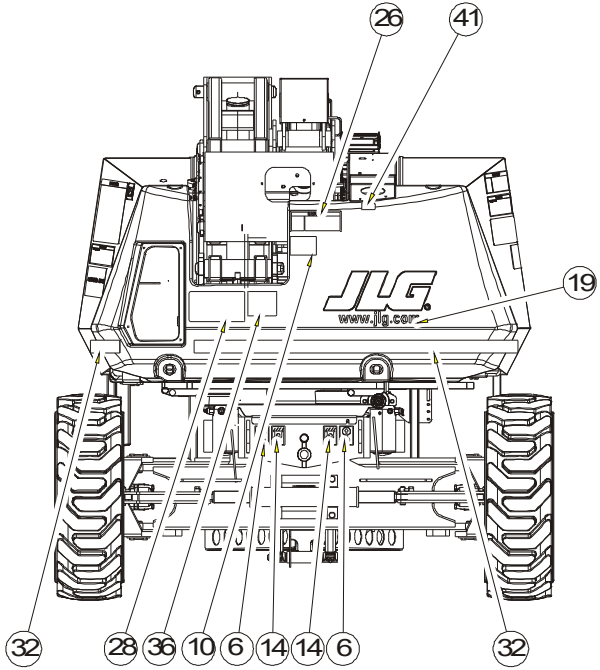

ANSI

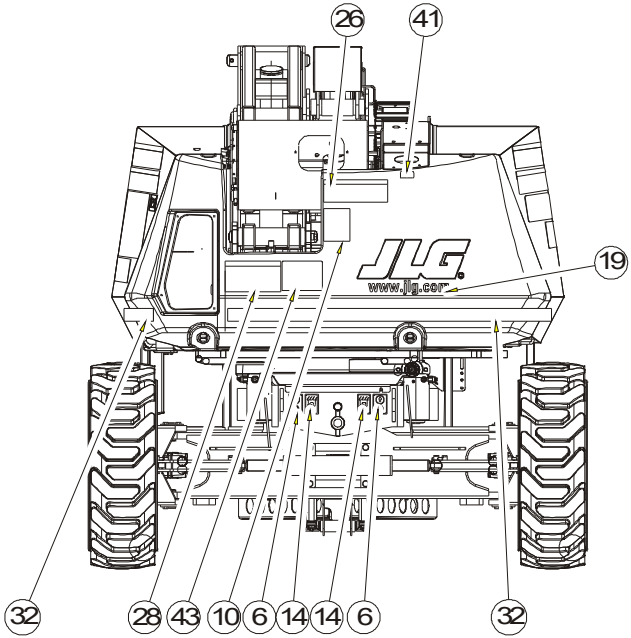

FRENCH

Figure 4-12. Decal Location Sheet 6 of 10

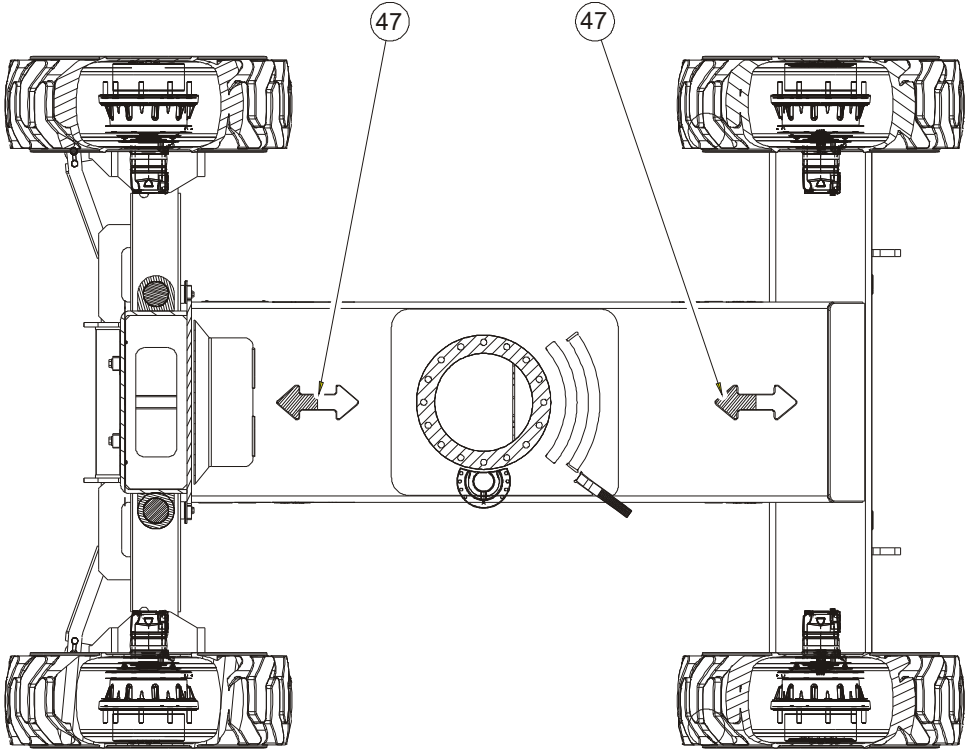

Figure 4-13. Decal Location Sheet 7 of 10

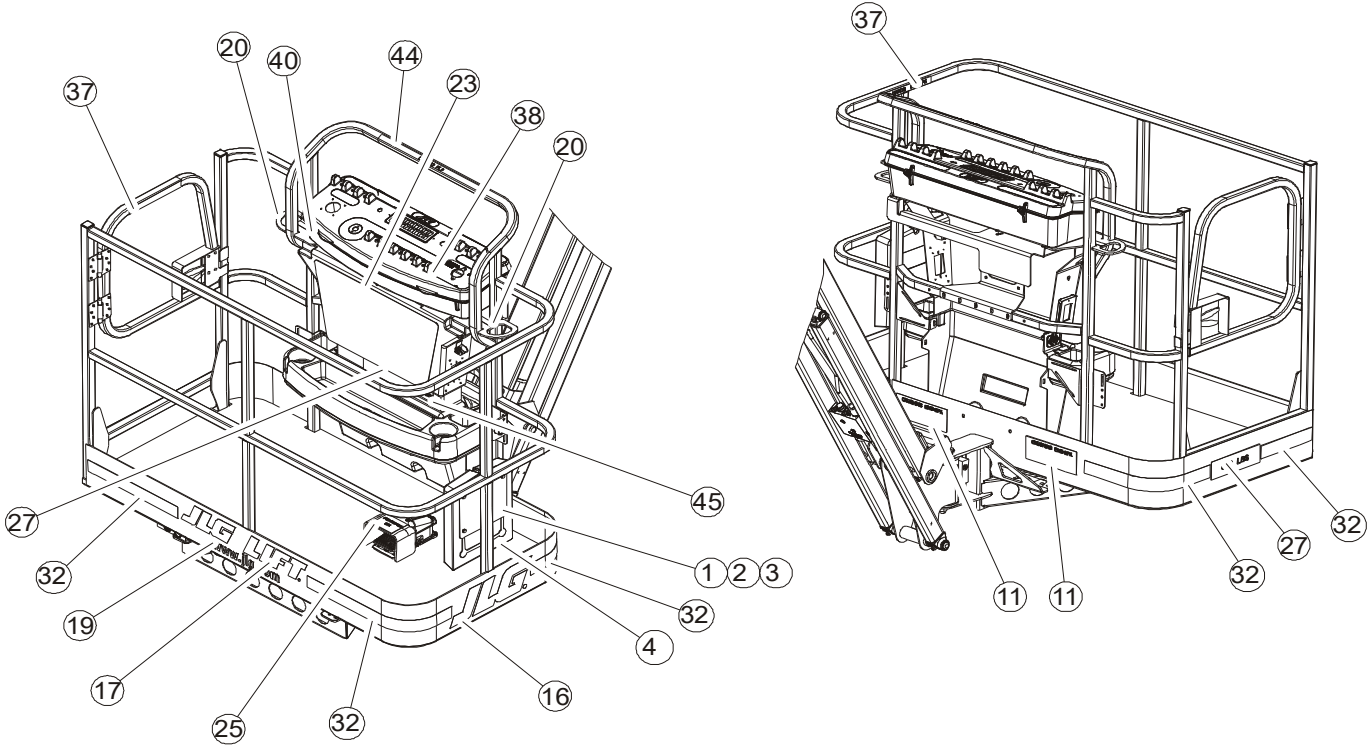

Figure 4-14. Decal Location Sheet 8 of 10

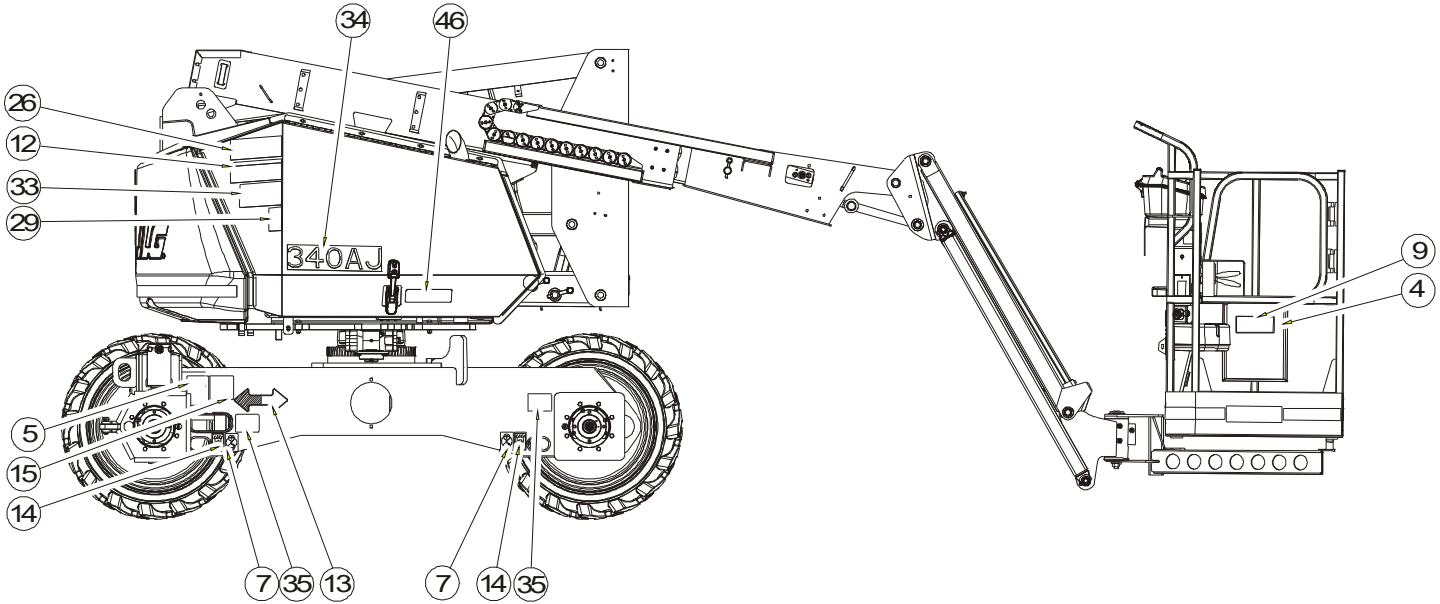

ANSI-SPANISH-FRENCH-KOREAN-CHINESE-PORTUGUESE-JAPANESE

Figure 4-15. Decal Location Sheet 9 of 10

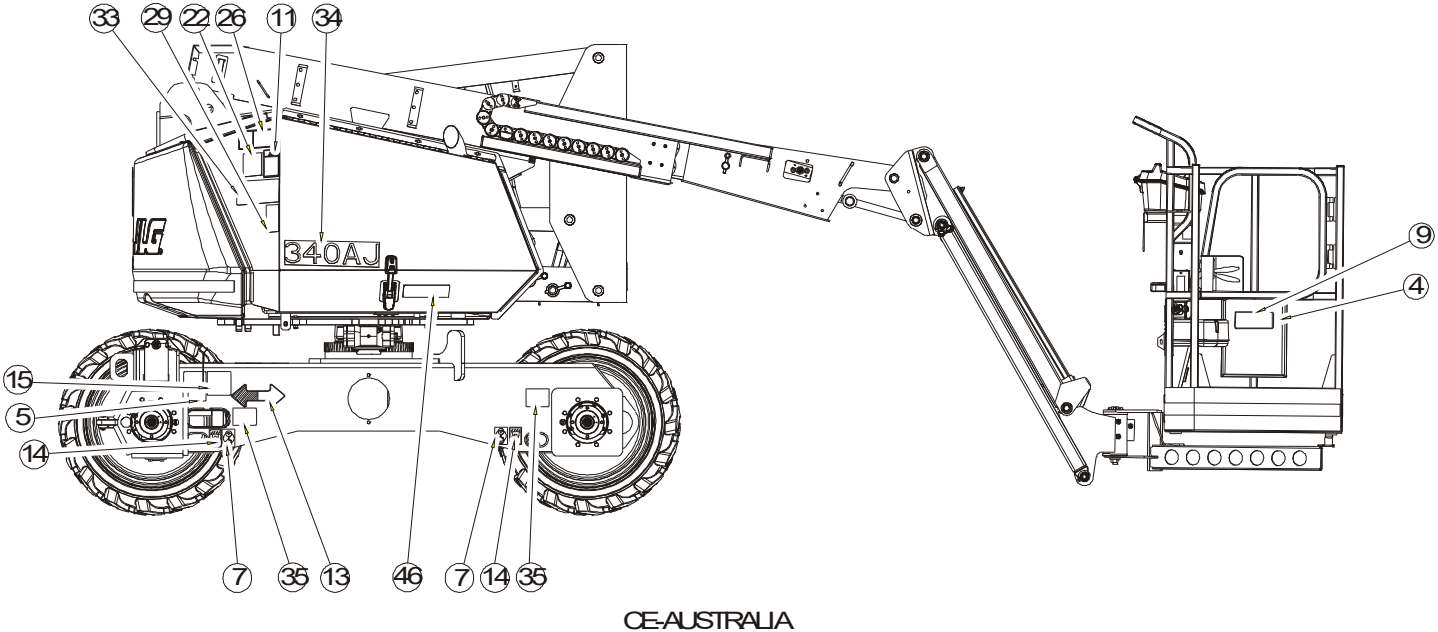

Figure 4-16. Decal Location Sheet 10 of 10

Item #	ANSI 1001119732-C	CE 1001115783-C	Australia 1001119733-C	Japan 1001119734-C	Korea 1001119735-C	French 1001119736-C	Chinese 1001119737-C	Portuguese 1001119738-C	Spanish 1001119739-C
1	--	--	--	--	--	--	--	--	--
2	--	--	--	--	--	--	--	--	--
3	--	--	--	--	--	--	--	--	--
4	--	--	--	--	--	--	--	--	--
5	1700584	1700584	1700584	1700584	1700584	1700584	1700584	1700584	1700584
6	1701500	1701500	1701500	1701500	1701500	1701500	1701500	1701500	1701500
7	1701499	1701499	1701499	1701499	1701499	1701499	1701499	1701499	1701499
8	1701504	1701504	1701504	1701504	1701504	1701504	1701504	1701504	1701504
9	1701509	1701509	1701509	1701509	1701509	1701509	1701509	1701509	1701509
10	1702391	1701517	1701517	1001113166	1001113509	1001113169	1001113168	1001113170	1001113171
11	1703804	1701518	1701518	1703950	1703951	1703948	1703949	1703952	1703947
12	1703953	--	--	1703944	1703945	1703942	1703943	1705903	1703941
13	1701642	1701642	1701642	1701642	1701642	1701642	1701642	1701642	1701642
14	1702300	1702300	1702300	1702300	1702300	1702300	1702300	1702300	1702300
15	1702631	1702631	1702631	1702631	1702631	1702631	1702631	1702631	1702631
16	--	--	--	--	--	--	--	--	--
17	--	--	--	--	--	--	--	--	--
18	--	--	--	--	--	--	--	--	--
19	--	--	--	--	--	--	--	--	--

Item #	ANSI 1001119732-C	CE 1001115783-C	Australia 1001119733-C	Japan 1001119734-C	Korea 1001119735-C	French 1001119736-C	Chinese 1001119737-C	Portuguese 1001119738-C	Spanish 1001119739-C
20	1704277	1704277	1704277	1704277	1704277	1704277	1704277	1704277	1704277
21	1704412	1704412	1704412	1704412	1704412	1704412	1704412	1704412	1704412
22	1703797	1705084	--	--	--	--	--	--	--
23	1703798	1705921	1705921	1703926	1703927	1703924	1703925	1703928	1703923
24	--	1705822	1705822	1705344	1705345	1705347	1705348	1705349	1705917
25	1703805	1705828	1705828	1703980	1703981	1703984	1703982	1703985	1703983
26	1701645	1705961	1705961	1703938	1703939	1703936	1703937	1703940	1703935
27	1707013	1705978	1705978	1707059	1707058	1707055	1707060	1707134	1707056
28	--	--	--	1707054	1707042	1707047	1707044	1707133	1707049
29	--	--	--	--	--	--	--	--	--
30	--	--	--	--	--	--	--	--	--
31	--	--	--	--	--	--	--	--	--
32	--	--	--	--	--	--	--	--	--
33	1001119576	1001119576	1001119576	1001119576	1001119576	1001119576	1001119576	1001119576	1001119576
34	1001119578	1001119578	1001119578	1001119578	1001119578	1001119578	1001119578	1001119578	1001119578
35	1001119580	1001119580	1001119580	1001119580	1001119580	1001119580	1001119580	1001119580	1001119580
36	--	--	--	--	--	--	--	--	--
37	1702868	--	--	--	1705969	1704000	1705968	1704002	1704001
38	1705351	--	--	1705426	1705427	1705429	1705430	1001113680	1705910
39	--	--	--	--	--	--	--	--	--

Item #	ANSI 1001119732-C	CE 1001115783-C	Australia 1001119733-C	Japan 1001119734-C	Korea 1001119735-C	French 1001119736-C	Chinese 1001119737-C	Portuguese 1001119738-C	Spanish 1001119739-C
40	1001231801	--	--	--	--	--	--	--	--
41	--	--	--	--	--	--	--	--	--
42	--	--	1001112551	1001112551	--	--	1001112551	--	--
43	1001120009	--	--	1001120009	1001120009	1001120009	1001120009	1001120009	1001120009
44	1001120010	--	--	1001120010	1001120010	1001120010	1001120010	1001120010	1001120010
45	1001120002	--	1001120003	1001120279	1001120280	1001120004	1001120281	1001120282	1001120283
46	1001119981	1001119981	1001119981	1001119981	1001119981	1001119981	1001119981	1001119981	1001119981
47	--	--	--	--	--	--	--	--	--
48	--	--	--	--	--	--	--	--	--
49	--	--	--	--	--	--	--	--	--
50	--	--	--	--	--	--	--	--	--
51	1001223055	1001223055	1001223055	1001224053	1001224048	1001223971	1001224050	1001224052	1001224052
52	--	--	--	--	--	1001223453	--	--	--

NOTES:

SECTION 5. EMERGENCY PROCEDURES

5.1 GENERAL

This section explains the steps to be taken in case of an emergency situation while operating.

5.2 INCIDENT NOTIFICATION

JLG Industries, Inc. must be notified immediately of any incident involving a JLG product. Even if no injury or property damage is evident, the factory should be contacted by telephone and provided with all necessary details.

- USA: 877-JLG-SAFE (554-7233)
- EUROPE: (32) 0 89 84 82 20
- AUSTRALIA: (61) 2 65 811111
- E-mail: ProductSafety@JLG.com

Failure to notify the manufacturer of an incident involving a JLG Industries product within 48 hours of such an occurrence may void any warranty consideration on that particular machine.

NOTICE

FOLLOWING ANY INCIDENT, THOROUGHLY INSPECT THE MACHINE AND TEST ALL FUNCTIONS FIRST FROM THE GROUND CONTROLS, THEN FROM THE PLATFORM CONTROLS. DO NOT LIFT ABOVE 3 M (10 FT.) UNTIL YOU ARE SURE THAT ALL DAMAGE HAS BEEN REPAIRED, IF REQUIRED, AND THAT ALL CONTROLS ARE OPERATING CORRECTLY.

5.3 EMERGENCY OPERATION

Operator Unable to Control Machine

IF THE PLATFORM OPERATOR IS PINNED, TRAPPED OR UNABLE TO OPERATE OR CONTROL MACHINE:

1. Other personnel should operate the machine from ground controls only as required.
2. Other qualified personnel on the platform may use the platform controls. DO NOT CONTINUE OPERATION IF CONTROLS DO NOT FUNCTION PROPERLY.
3. Cranes, forklift trucks or other equipment can be used to stabilize motion of the machine.

Platform or Boom Caught Overhead

If the platform or boom becomes jammed or snagged in overhead structures or equipment, do the following:

1. Shut off the machine.
2. Rescue all people in the platform before freeing the machine. Personnel must be out of the platform before operating any controls on the machine.
3. Use cranes, forklifts, or other equipment to stabilize motion of the machine to prevent a tip over as required.
4. From the ground controls, use the Auxiliary Power System (if equipped) to carefully free the platform or boom from the object.
5. Once clear, restart the machine and return the platform to a safe position.
6. Inspect the machine for damage. If the machine is damaged or does not operate properly, turn off the machine immediately. Report the problem to the proper maintenance personnel. Do not operate the machine until it is declared safe for operation.

5.4 AUXILIARY DESCENT SYSTEM

Refer to Figure 5-1., Auxiliary Descent Decal and Hand Pump.

The auxiliary descent system allows the boom and jib to be lowered in the event of primary power (engine power) loss. This system uses electrically powered solenoid valves and the force of gravity to lower the booms and jib. The following functions are included in this system and will operate normally if the engine is not running and the auxiliary power switch has been activated.

- Main Lift Down
- Tower Lift Down
- Jib Lift Down

1. From the ground control console, place the Platform/ Ground Select switch in the Ground position.
2. Pull out the Power/Emergency Stop control.
3. Hold down the Auxiliary Descent Enable Switch and the control switch for the desired function.

If it is necessary to raise the jib in order to properly perform the auxiliary descent procedure, use the following procedure.

1. From the ground control console, place the Platform/ Ground Select switch in the Ground position.
2. Pull out the Power/Emergency Stop control.
3. Hold down the Auxiliary Descent Enable Switch, hold up the jib lift control switch and operate the hand pump located next to the hydraulic tank to raise the jib.

5.5 MANUAL SWING OVERRIDE

The manual swing override is used to manually swing the boom and turntable assembly in the event of a total power failure when the platform is positioned over a structure or obstacle. To operate the manual swing override, proceed as follows:

1. Using a 7/8 inch socket and ratchet wrench, locate nut on swing worm gear on left side of machine.
2. Install wrench on nut and ratchet in the direction desired.

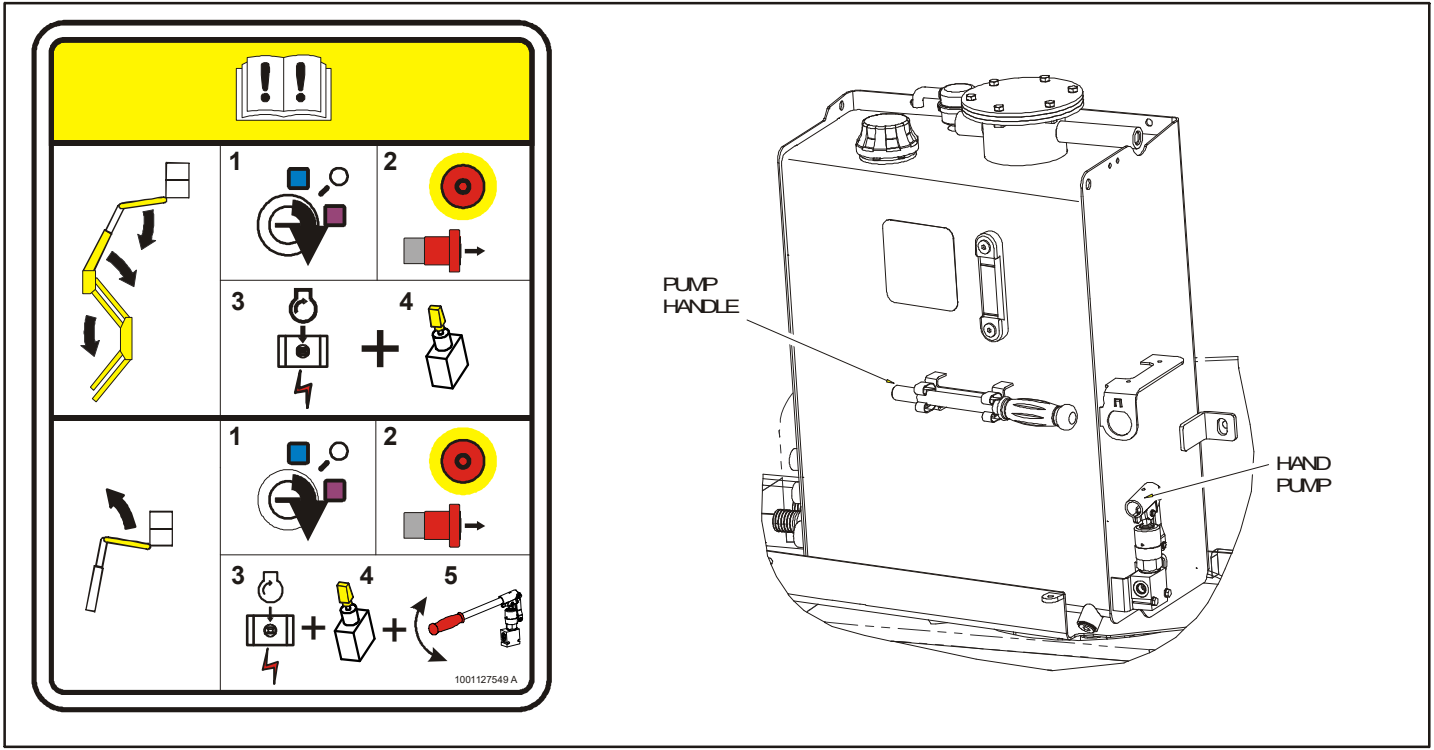

Figure 5-1. Auxiliary Descent Decal and Hand Pump

5.6 EMERGENCY TOWING PROCEDURES

Towing this machine is prohibited. However, provisions for moving the machine have been incorporated. The following procedures are to be used ONLY for emergency movement to a suitable maintenance area.

NOTICE

THE ALLOWABLE TOWING SPEED IS 1.9 MPH (3 KPH). THE MAXIMUM ALLOWABLE TOWING DISTANCE IS 0.6 MILES (1 KM).

1. Chock wheels securely.
2. Engage the mechanical release on both drive hubs by loosening, completely reversing, and tightening the two bolts on each hub.
3. Connect suitable equipment, remove chocks, and move machine.

After moving machine, complete the following procedure:

1. Position machine on a firm level surface.
2. Chock wheels securely.
3. Disengage the mechanical release on both drive hubs by loosening, completely reversing, and tightening the two bolts on each hub.
4. Remove chocks from wheels as desired.

5.7 MACHINE SAFETY SYSTEM OVERRIDE (MSSO)(CE ONLY)

The Machine Safety System Override (MSSO) is only to be used to retrieve an operator that is pinned, trapped, or unable to operate the machine and function controls are locked out from the platform due to a platform overload situation.

NOTE: *If the MSSO functionality is used, the fault indicator will flash and a fault code is set in the JLG Control System which must be reset by a qualified JLG Service Technician.*

NOTE: *No functional checks of the MSSO system are necessary. The JLG Control system will set a Diagnostic Trouble Code if the control switch is faulty.*

To operate the MSSO:

1. From the ground control console, place the Platform/ Ground Select switch in the Ground position.
2. Pull out the Power/Emergency Stop control.
3. Start the engine.
4. Press and hold the MSSO switch and the control switch for the desired function.

NOTES:

SECTION 6. GENERAL SPECIFICATIONS & OPERATOR MAINTENANCE

6.1 INTRODUCTION

This section of the manual provides additional necessary information to the operator for proper operation and maintenance of this machine.

The maintenance portion of this section is intended as information to assist the machine operator to perform daily maintenance tasks only, and does not replace the more thorough Preventive Maintenance and Inspection Schedule included in the Service and Maintenance Manual.

Other Publications Available:

Service and Maintenance Manual 3121259

Illustrated Parts Manual 3121260

6.2 OPERATING SPECIFICATIONS AND PERFORMANCE DATA

Operating Specifications

Table 6-1. Operating Specifications

Capacity: Unrestricted: ANSI CE & Australia	 500 lbs. (227 kg) 500 lbs. (230 kg)
Maximum Travel Grade, stowed Position (Gradeability) see Figure 4-3.	45%
Maximum Travel Grade, stowed Position (Side Slope) see Figure 4-3.	5°
Drive Speed - Stowed	3.1 mph (5.0 kph)
Elevated Drive Speed	0.6 mph (1.0 kph)
Gross Machine Weight - Approximate ANSI CE & Australia	 9400 lbs. (4263 kg) 9800 lbs. (4445 kg)

Table 6-1. Operating Specifications

Ground Bearing Pressure	
Pneumatic	59 psi (4.1 kg/cm^2)
Foam Filled	64 psi (4.5 kg/cm^2)
Solid	70 psi (4.9 kg/cm^2)
Non-Marking Solid	81 psi (5.7 kg/cm^2)
System Voltage	12V DC
Maximum Main Relief Hyd. Pressure	4060 psi (280 Bar)

Dimensional Data

Table 6-2. Dimensional Data

Turning Radius (Inside)	5'(1.52 m)
Turning Radius (Outside)	13'(3.96 m)
Machine Height (stowed)	6'7" (2 m)
Machine Height (storage)	7'1" (2.17 m)
Machine Length (stowed)	18'2" (5.52 m)
Machine Length (storage)	13'1" (3.98 m)

Table 6-2. Dimensional Data

Up and Over Platform Height	17'0" (5.17 m)
Horizontal Reach	19'11" (6.06 m)
Machine Width	6'4" (1.93 m)
Wheel Base	6'2" (1.87 cm)
Platform Height	
ANSI	33'9" (10.29 m)
CE & Australia	33'10.5" (10.33 m)
Ground Clearance	10.1" (23.7 cm)

Capacities

Table 6-3. Capacities

Hydraulic Oil Tank (to Full Level)	20.6 Gal. (77.9 L)
Drive Hub*	25.5 oz. (0.75 L)
Engine Coolant	1.55 gal. (5.9L)
*Drive hubs should be one half full of lubricant.	

Tires

Table 6-4. Tires

Size	**265/50 D20 (20" x 9")**
Maximum Tire Load	4800 lbs. (2177 kg)
Type	Air, Foam-Filled
Size	**18" x 7"**
Maximum Tire Load	4800 lbs. (2177 kg)
Type	Solid
Size	**33" x 12"**
Maximum Tire Load	4800 lb (2177 kg)
Type	Turf (Air or Foam-Filled)

Engine Data

Table 6-5. Kubota D1105-E3

Type	Liquid Cooled
Number of Cylinders	3
Bore	3.07 in. (78 mm)
Stroke	3.09 in. (78.4 mm)
Total Displacement	68.5 cu. in. (1123 cm^3)
Compression Ratio	24:1
Firing Order	1-2-3
Output	24.8 hp (18.5 kW)
Low Idle RPM	1200 ± 50
High Idle RPM	3000 ± 50

Table 6-6. GM 0.97L

Type	Liquid Cooled
Number of Cylinders	4
Bore	2.58 in. (65.5 mm)
Stroke	2.84 in. (72.0 mm)
Total Displacement	59 cu. in. (967 cm^3)
Compression Ratio	8.8:1
Firing Order	1-3-4-2
Output	28.6 hp (21.3 kW)
Low Idle RPM	1200 ± 50
High Idle RPM	3000 ± 50

Hydraulic Oil

Table 6-7. Hydraulic Oil

Hydraulic System Operating Temperature Range	S.A.E. Viscosity Grade
+0° to + 180° F (-18° to +83° C)	10W
+0° to + 210° F (-18° to +99° C)	10W-20, 10W30
+50° to + 210° F (+10° to +99° C	20W-20

NOTE: *Hydraulic oils require anti-wear qualities at least API Service Classification GL-3, and sufficient chemical stability for mobile hydraulic system service.*

NOTE: *Machines may be equipped with Mobil EAL biodegradable and non-toxic hydraulic oil. This is a fully synthetic hydraulic oil that possesses the same anti-wear and rust protection characteristics as mineral oils, but will not adversely affect the ground water or the environment when spilled or leaked in small amounts.*

NOTE: *Aside from JLG recommendations, it is not advisable to mix oils of different brands or types, as they may not contain the same required additives or be of comparable viscosities. If use of hydraulic oil other than Mobil 424 is desired, contact JLG Industries for proper recommendations.*

OIL SAMPLING

See Figure 6-1., Oil Sampling Port.

This machine is equipped with an oil sampling valve to allow for verification of hydraulic oil condition. Refer to the Service Manual for Oil Sampling procedures.

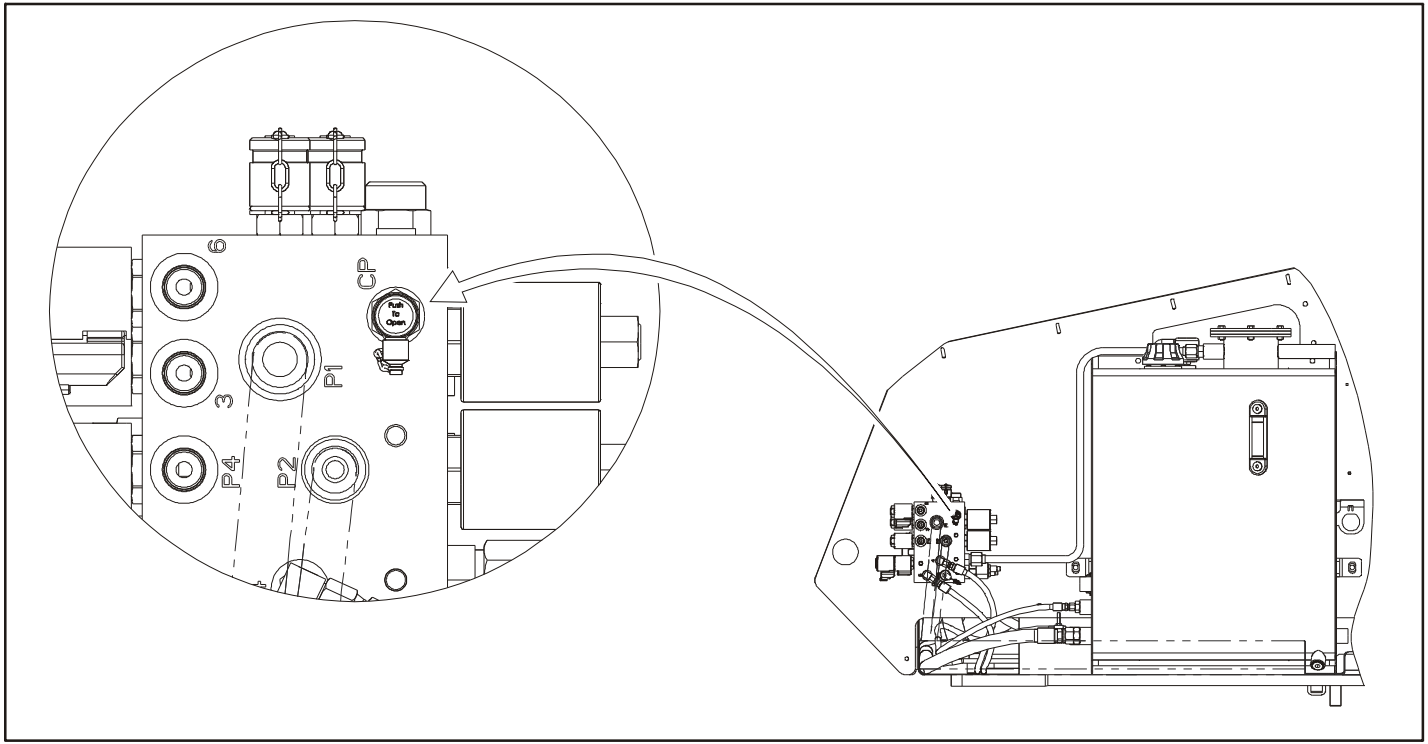

Figure 6-1. Oil Sampling Port

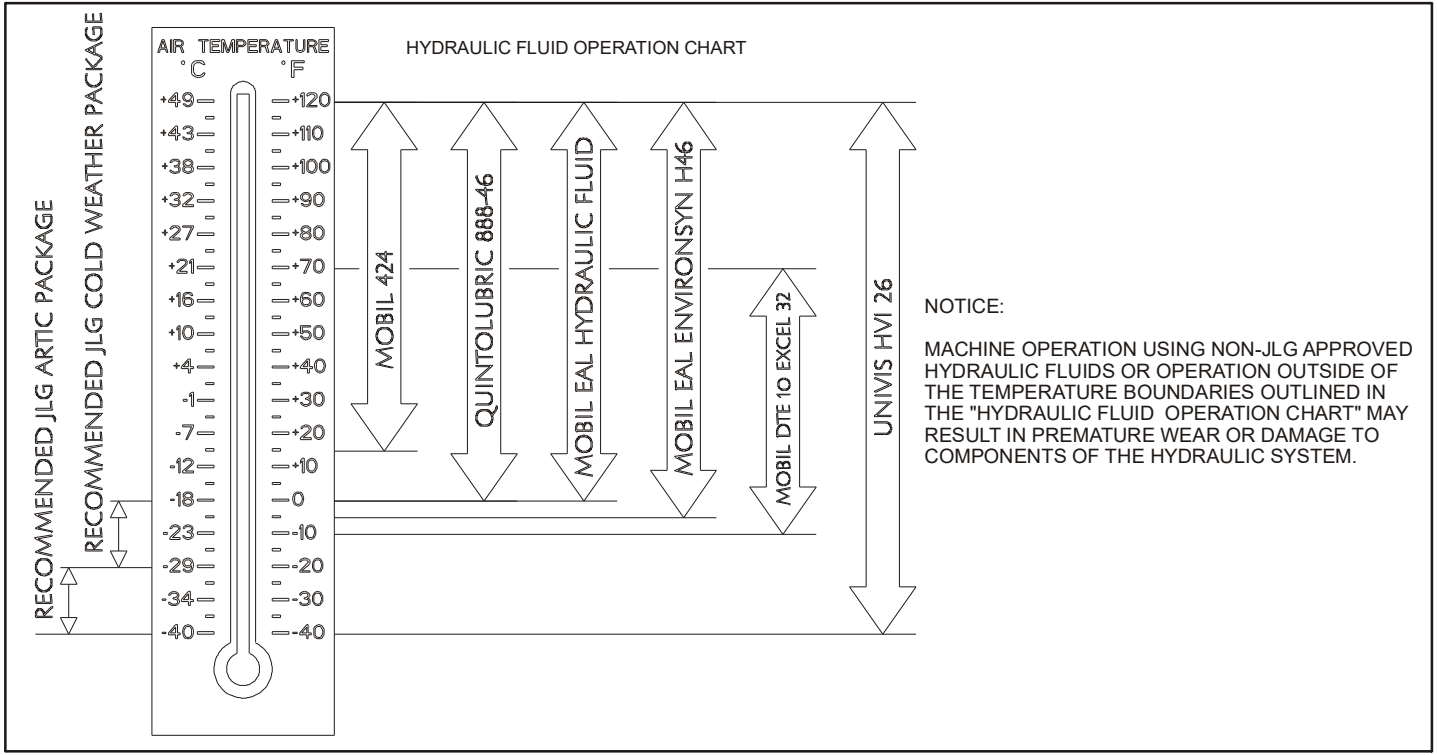

Figure 6-2. Hydraulic Oil Operation Chart - Sheet 1 of 2

Fluid	Properties		Base				Classifications		
Description	Viscosity at 40° C (cSt, Typical)	Viscosity Index	Mineral Oils	Vegetable Oils	Synthetic	Synthetic Polyol Esters	Readily Biodegradable*	Virtually Non-toxic**	Fire Resistant***
Mobilfluid 424	55	145	X						
Mobil DTE 10 Excel 32	32	164	X					X	
Univis HVI 26	26	376	X						
Mobil EAL Hydraulic Oil	47	176		X			X	X	
Mobil EAL Envirosyn H46	49	145			X		X	X	
Quintolubric 888-46	50	185				X	X	X	X

* Readily biodegradable classification indicates one of the following:
CO2 Conversion > 60% per EPA 560/6-82-003
CO2 Conversion > 80% per CEC-L-33-A-93

** Virtually Non-toxic classification indicates an LC50 > 5000 ppm per OECD 203

*** Fire Resistant classification indicates Factory Mutual Research Corp. (FMRC) Approval

41507 40 B

Figure 6-3. Hydraulic Oil Operation Chart - Sheet 2 of 2

Major Component Weights

⚠ WARNING

DO NOT REPLACE ITEMS CRITICAL TO STABILITY WITH ITEMS OF DIFFERENT WEIGHT OR SPECIFICATION (FOR EXAMPLE: BATTERIES, FILLED TIRES, PLATFORM) DO NOT MODIFY UNIT IN ANY WAY TO AFFECT STABILITY.

Table 6-8. Critical Stability Weights

Components	LBS.	KG.
Counterweight	1875 ± 75	850.5 ± 34
Tire and Wheel - 20x9 Pneumatic	130	59
Tire and Wheel - 20x9 Foam-Filled	220	99.8
Tire and Wheel - 18x7	230	104.3
Tire and Wheel - 33 x 12 Pneumatic	129	58.8
Tire and Wheel - 33 x 12 Foam-Filled	277	125.6
Platform & Console - 30x60	242.5	110
Platform & Console - 30x48	216	98
Battery	66	30

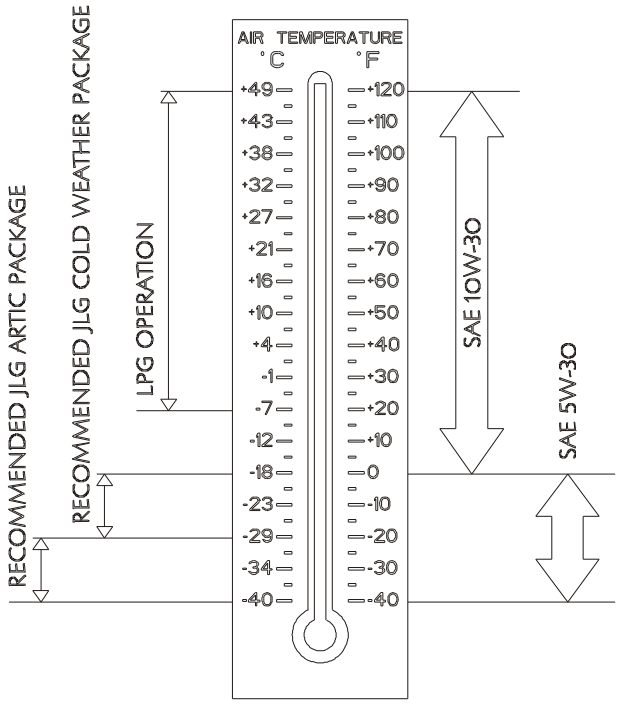

NOTICE:

MACHINE OPERATION USING NON-JLG APPROVED ENGINE OIL OR OPERATION OUTSIDE OF THE TEMPERATURE BOUNDARIES OUTLINED IN THE "ENGINE OIL OPERATION CHART" MAY RESULT IN PREMATURE WEAR OR DAMAGE TO COMPONENTS OF THE ENGINE.

1001120074-A

Figure 6-4. Engine Oil Operation Chart - GM

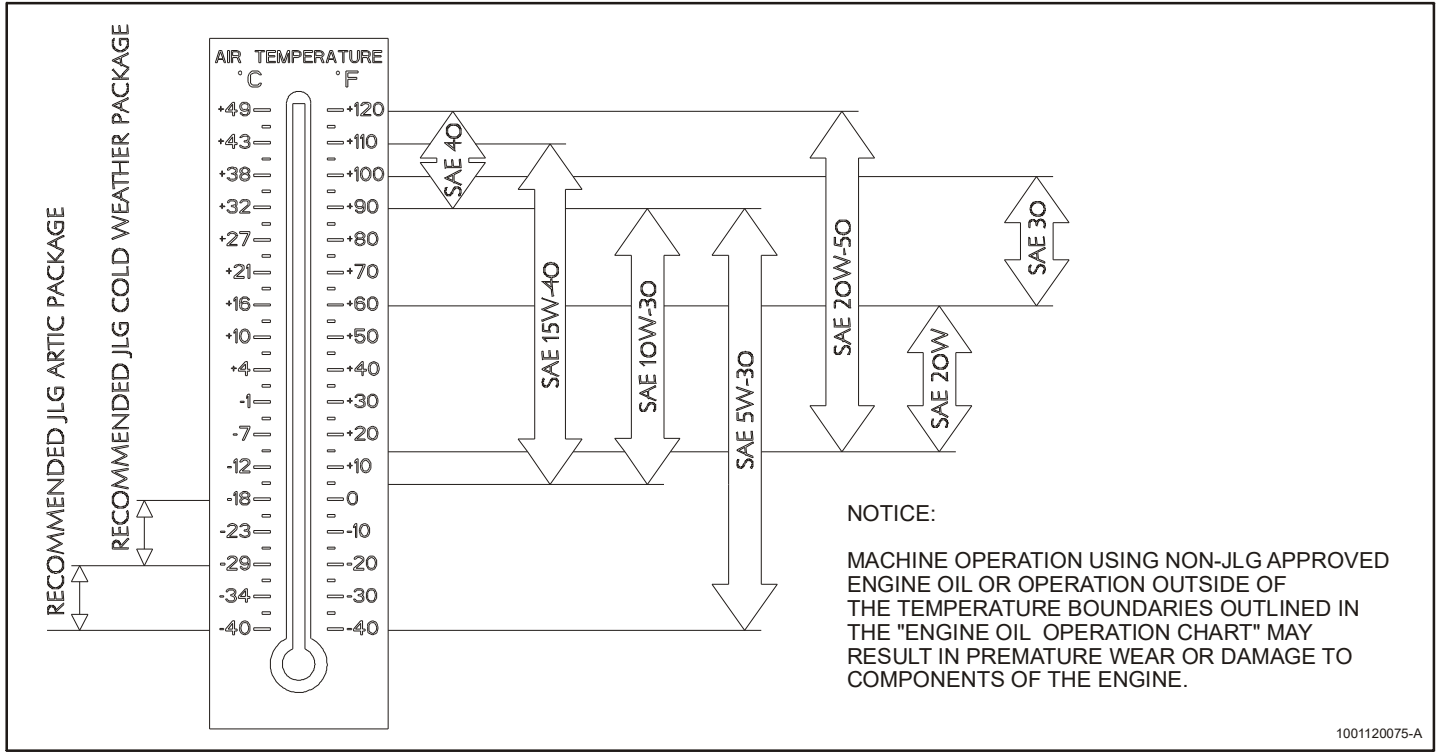

Figure 6-5. Engine Oil Operation Chart - Kubota

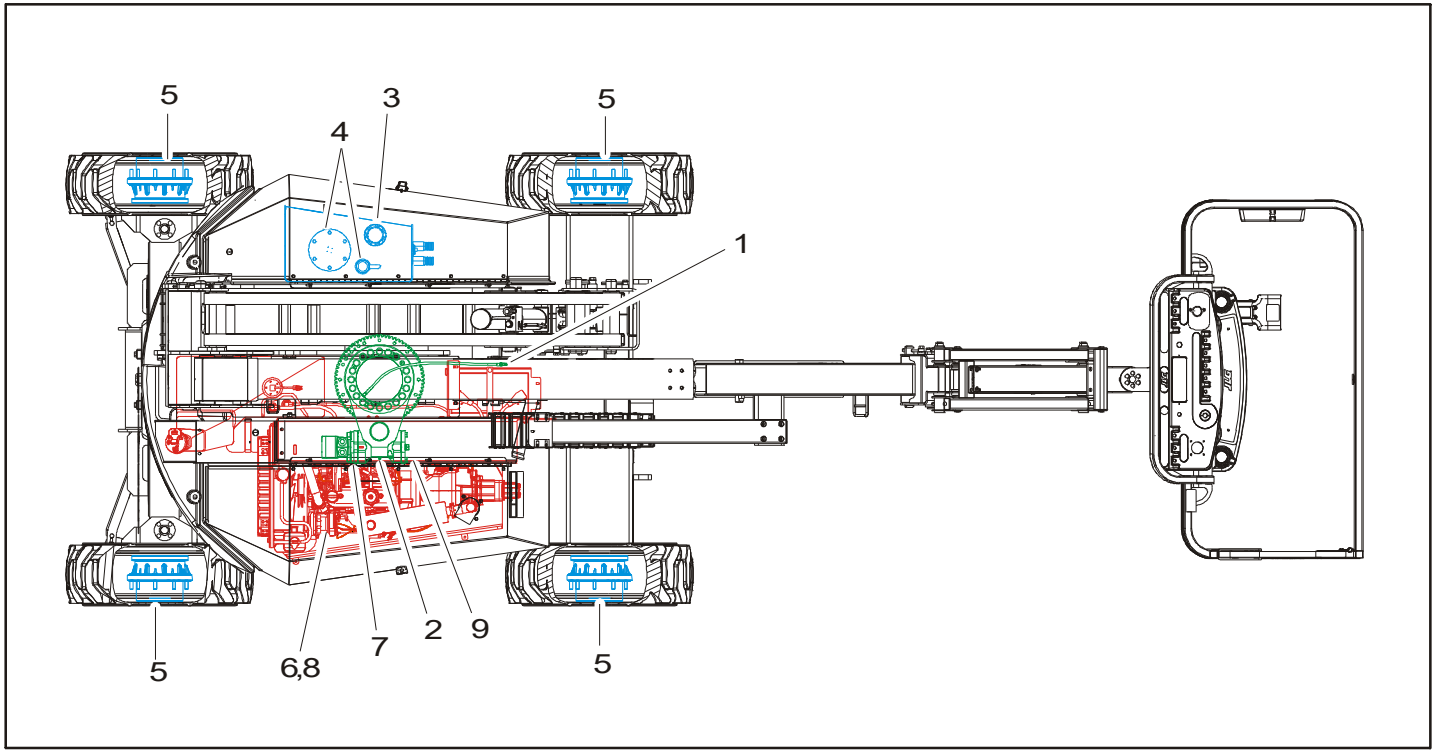

Figure 6-6. Operator Maintenance and Lubrication Diagram

6.3 OPERATOR MAINTENANCE

NOTE: *The following numbers correspond to those in Figure 6-6., Operator Maintenance and Lubrication Diagram.*

Table 6-9. Lubrication Specifications.

KEY	SPECIFICATIONS
BG*	Bearing Grease (JLG Part No. 3020029) Mobilith SHC 460.
HO	Hydraulic Oil. API service classification GL-4, e.g. Mobilfluid 424.
EPGL	Extreme Pressure Gear Lube (oil) meeting API Service Classification GL-5 or Mil-Spec Mil-L-2105.
MPG	Multipurpose Grease having a minimum dripping point of 350° F (177° C). Excellent water resistance and adhesive qualities, and being of extreme pressure type. (Timken OK 40 pounds minimum.)
EO	Engine (crankcase) Oil. Gas - API SF, SH, SG class, MIL-L-2104. Diesel - API CC/CD class, MIL-L-2104B/MIL-L-2104C.
*MPG may be substituted for these lubricants, if necessary, but service intervals will be reduced.	

NOTICE

LUBRICATION INTERVALS ARE BASED ON MACHINE OPERATION UNDER NORMAL CONDITIONS. FOR MACHINES USED IN MULTI-SHIFT OPERATIONS AND/OR EXPOSED TO HOSTILE ENVIRONMENTS OR CONDITIONS, LUBRICATION FREQUENCIES MUST BE INCREASED ACCORDINGLY.

1. Swing Bearing

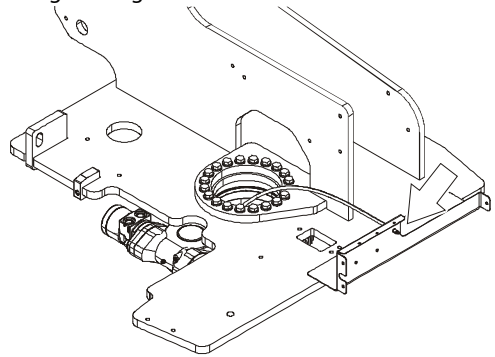

Lube Point(s) - Remote Fitting
Capacity - A/R
Lube - BG
Interval - Every 3 months or 150 hrs of operation
Comments - Apply grease and rotate in 90 degree intervals until bearing is completely lubricated

2. Swing Bearing/Worm Gear Teeth

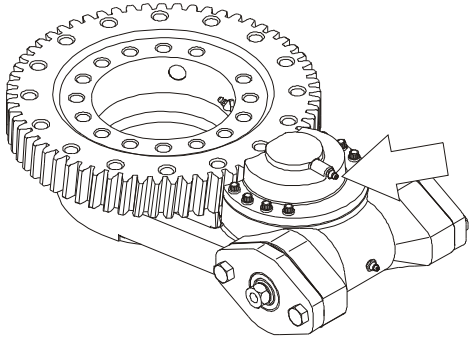

Lube Point(s) - Grease Fitting
Capacity - A/R
Lube - Lubriplate 930-AAA
Interval - A/R

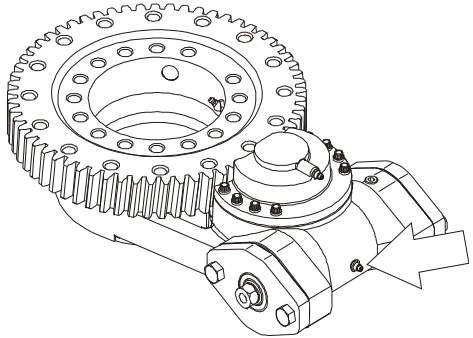

Lube Point(s) - Grease Fitting
Capacity - A/R
Lube - Mobil SHC 460
Interval - A/R

CAUTION

DO NOT OVERGREASE BEARINGS. OVERGREASING BEARINGS WILL RESULT IN DAMAGE TO OUTER SEAL IN HOUSING.

3. Hydraulic Tank

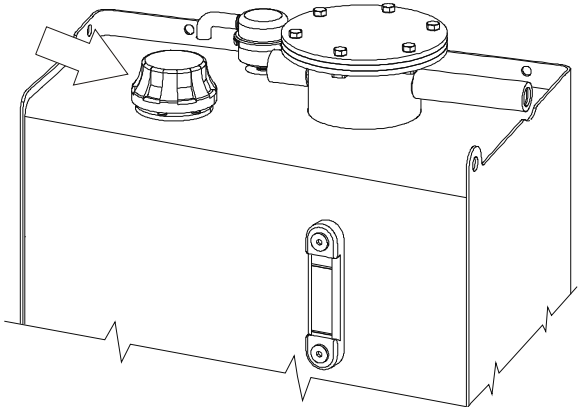

Lube Point(s) - Fill Cap

Capacity - 24.8 Gal. (93.9 L), 20.6 Gal. (77.9 L) to Full Level; 17.8 Gal (67.4 L) to Low Level

Lube - HO

Interval - Check Level daily; Change every 2 years or 1200 hours of operation.

Comments - On new machines, those recently overhauled, or after changing hydraulic oil, operate all systems a minimum of two complete cycles and recheck oil level in reservoir.

4. Hydraulic Tank Return Filter and Breather

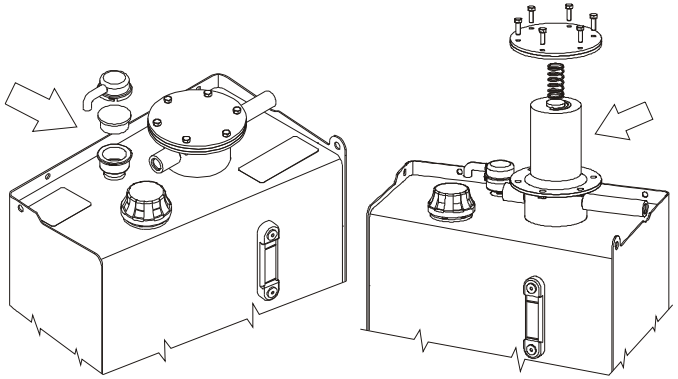

Interval - Change after first 50 hrs. and every 6 months or 300 hrs. thereafter.

Comments - For breather element, twist top to replace. Under certain conditions, it may be necessary to replace both elements on a more frequent basis.

5. Wheel Drive Hub

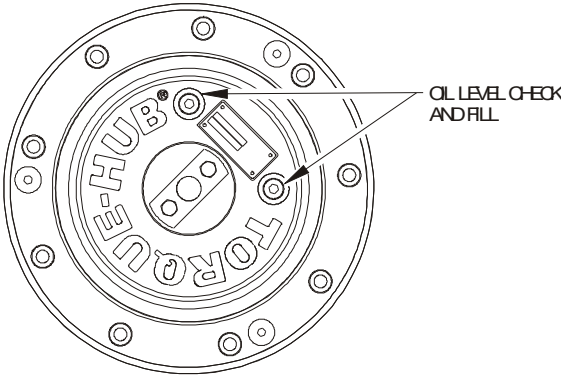

Lube Point(s) - Level/Fill Plug
Capacity - 25.5 oz. (0.75 L)(1/2 Full)
Lube - EPGL
Interval - Check level every 3 months or 150 hrs of operation; change every 2 years or 1200 hours of operation

6. Oil Change with Filter - Kubota

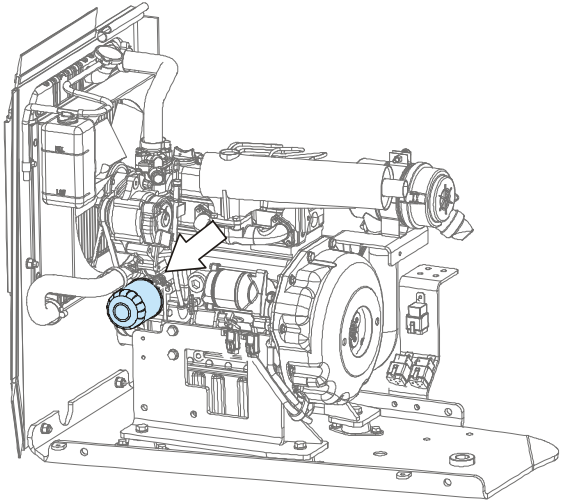

Lube Point(s) - Fill Cap/Spin-on Element
Capacity - 5.4 Quarts (5.1 L) w/Filter
Lube - EO
Interval - Check level daily; change every 500 hours or six months, whichever comes first. Adjust final oil level by mark on dipstick.

7. Fuel Filter/Water Separator - Kubota

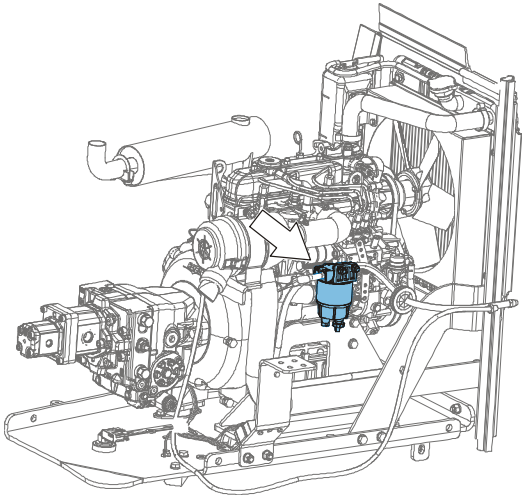

Lube Point(s) - Replaceable Element
Interval - Every year or 600 hours of operation

8. Oil Change with Filter - GM

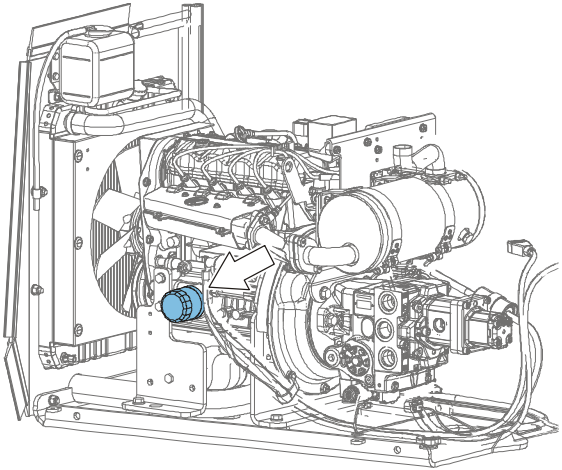

Lube Point(s) - Fill Cap/Spin-on Element
Capacity - 3.1 Quarts (3 L) w/Filter
Lube - EO
Interval - Check level daily; change every 500 hours or six months, whichever comes first. Adjust final oil level by mark on dipstick.

9. Charge Filter

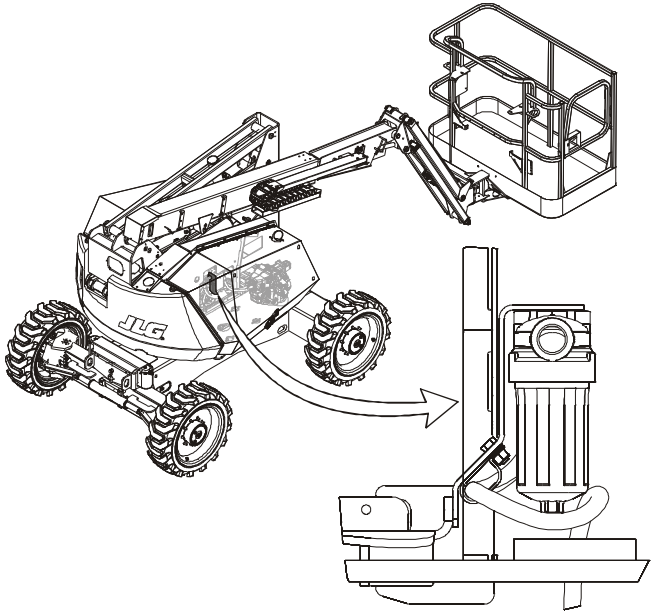

Interval - Change after first 50 hrs. and every 6 months or 300 hrs. thereafter.

Comments - Remove the engine tray retaining bolt and pull out engine tray to gain access.

6.4 TIRES & WHEELS

Tire Replacement

JLG recommends a replacement tire be the same size, ply and brand as originally installed on the machine. Please refer to the JLG Parts Manual for the part number of the approved tires for a particular machine model. If not using a JLG approved replacement tire, we recommend that replacement tires have the following characteristics:

- Equal or greater ply/load rating and size of original
- Tire tread contact width equal or greater than original
- Wheel diameter, width, and offset dimensions equal to the original
- Approved for the application by the tire manufacturer (including inflation pressure and maximum tire load)

Unless specifically approved by JLG Industries Inc. do not replace a foam filled or ballast filled tire assembly with a pneumatic tire. When selecting and installing a replacement tire, ensure that all tires are inflated to the pressure recommended by JLG. Due to size variations between tire brands, both tires on the same axle should be the same.

Wheel and Tire Replacement

The rims installed on each product model have been designed for stability requirements which consist of track width, tire pressure, and load capacity. Size changes such as rim width, center piece location, larger or smaller diameter, etc., without written factory recommendations, may result in an unsafe condition regarding stability.

Wheel Installation

It is extremely important to apply and maintain proper wheel mounting torque.

⚠ WARNING

WHEEL NUTS MUST BE INSTALLED AND MAINTAINED AT THE PROPER TORQUE TO PREVENT LOOSE WHEELS, BROKEN STUDS, AND POSSIBLE DANGEROUS SEPARATION OF WHEEL FROM THE AXLE. BE SURE TO USE ONLY THE NUTS MATCHED TO THE CONE ANGLE OF THE WHEEL.

Tighten the lug nuts to the proper torque to prevent wheels from coming loose. Use a torque wrench to tighten the fasteners. If you do not have a torque wrench, tighten the fasteners with a lug wrench, then immediately have a service garage or dealer tighten the lug nuts to the proper torque. Over-tightening will result in breaking the studs or permanently deforming the mounting stud holes in the wheels. The proper procedure for attaching wheels is as follows:

1. Start all nuts by hand to prevent cross threading. DO NOT use a lubricant on threads or nuts.
2. Tighten nuts in the following sequence.

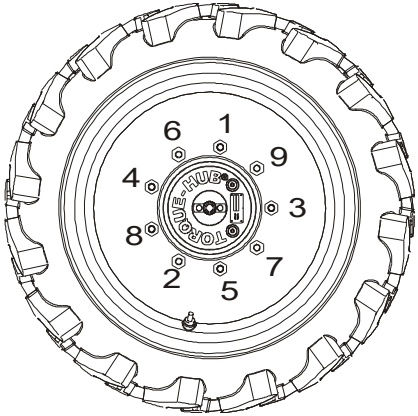

3. The tightening of the nuts should be done in stages. Following the recommended sequence, tighten nuts per wheel torque.

Table 6-10. Wheel Torque Chart

TORQUE SEQUENCE		
1st Stage	2nd Stage	3rd Stage
40 ft lbs (55 Nm)	95 ft lbs (130 Nm)	170 ft lbs (230 Nm)

4. Wheel nuts should be torqued before first road use and after each wheel removal. Check and torque every 3 months or 150 hours of operation.

6.5 SUPPLEMENTAL INFORMATION

The following information is provided in accordance with the requirements of the European Machinery Directive 2006/42/EC and is only applicable to CE machines.

For electric powered machines, the equivalent continuous A-Weighted sound pressure level at the work platform is less than 70dB(A)

For combustion engine powered machines, guaranteed Sound Power Level (LWA) per European Directive 2000/14/EC (Noise Emission in the Environment by Equipment for Use Outdoors) based on test methods in accordance with Annex III, Part B, Method 1 and 0 of the directive, is 104 dB.

The vibration total value to which the hand-arm system is subjected does not exceed 2,5 m/s^2. The highest root mean square value of weighted acceleration to which the whole body is subjected does not exceed 0,5 m/s^2.

SECTION 7. INSPECTION AND REPAIR LOG

Machine Serial Number _____

Table 7-1. Inspection and Repair Log

Date	Comments

Table 7-1. Inspection and Repair Log

Date	Comments

An Oshkosh Corporation Company

TRANSFER OF OWNERSHIP

To Product Owner:

If you now own but ARE NOT the original purchaser of the product covered by this manual, we would like to know who you are. For the purpose of receiving safety-related bulletins, it is very important to keep JLG Industries, Inc. updated with the current ownership of all JLG products. JLG maintains owner information for each JLG product and uses this information in cases where owner notification is necessary.

Please use this form to provide JLG with updated information with regard to the current ownership of JLG products. Please return completed form to the JLG Product Safety & Reliability Department via facsimile or mail to address as specified below.

Thank You,
Product Safety & Reliability Department
JLG Industries, Inc.
13224 Fountainhead Plaza
Hagerstown, MD 21742
USA
Telephone: +1-717-485-6591
Fax: +1-301-745-3713

NOTE: Leased or rented units should not be included on this form.

Mfg. Model: _____

Serial Number: _____

Previous Owner: _____

Address: _____

_____

Country: _____ **Telephone: (_____)** _____

Date of Transfer: _____

Current Owner: _____

Address: _____

_____

Country: _____ **Telephone: (_____)** _____

Who in your organization should we notify?

Name: _____

Title:_____

3121258

An Oshkosh Corporation Company

Corporate Office
JLG Industries, Inc.
1 JLG Drive
McConnellsburg, PA 17233-9533 USA
(717) 485-5161 (Corporate)
(877) 554-5438 (Customer Support)
(717) 485-6417

Visit our website for JLG Worldwide Locations.
www.jlg.com